STRUCTURAL DESIGN CRITERIA

1. BASIS OF DESIGN : 2009 INTERNATIONAL BUILDING CODE, ASCE 7-05
2. LIVE LOAD

   CORRIDOR = 100 PSF — ROOF = 20 PSF / 60 PSF
   CLASS ROOM = 40 PSF — MECHANICAL ROOM = 60 PSF
   OFFICE = 50 PSF — STAIR = 100 PSF

3. WIND FORCE: (ASCE 7-05)

   BASIC WIND SPEED = 170 MPH
   EXPOSURE CATEGORY: C
   IMPORTANCE FACTOR, Iw = 1.15
   WIND PRESSURE, P = qz GCp - qh (GCpi)
   GUST FACTOR, G = 0.85
   Cp = EXTERNAL PRESSURE COEFFICIENT FROM ASCE 7-05 FIG. 6-6 OR 6-8
   (GCpi) = INTERNAL PRESSURE COEFFICIENT FROM ASCE 7-05 FIG. 6-5
   VELOCITY PRESSURE, $q_z = 0.00256\ K_z K_{zt} K_d I_w V^2$ PSF
   WHERE: TOPOGRAPHIC FACTOR, Kzt = 1.0
   WIND DIRECTIONALITY FACTOR, Kd = 0.85
   Kz IS THE VELOCITY PRESSURE EXPOSURE COEFFICIENT
   $K_z = 2.01\ (z/z_g)^{2/\alpha}$ FOR 15 FEET ≤ z ≤ zg
   $K_z = 2.01\ (15/z_g)^{2/\alpha}$ FOR z < 15 FEET
   Z = THE VERTICAL DISTANCE FROM SPECIFIED GROUND LEVEL TO ELEMENT CENTROID
   zg AND α ARE SPECIFIED IN ASCE 7-05 TABLE 6-2
   qh = THE VELOCITY PRESSURE AT MEAN ROOF HEIGHT

4. SEISMIC FORCE (IBC 2009)

   ECCENTRICITY RATIO = 5%
   RESPONSE MODIFICATION FACTOR, R = 5
   OCCUPANCY IMPORTANCE FACTOR = 1.15
   0.2 SECOND SPECTRAL RESPONSE ACCELERATION (5% OF CRITICAL DAMPING), Ss = 1.5 g
   1 SECOND SPECTRAL RESPONSE ACCELERATION (5% OF CRITICAL DAMPING), S1 = 0.60 g
   LONG-PERIOD TRANSITION PERIOD = 12
   SITE CLASS: D
   OCCUPANCY CATEGORY: III
   SEISMIC DESIGN CATEGORY: D
   Sds = 1.0 g
   Sd1 = 0.6 g

5. REINFORCED CONCRETE

   FOOTING: ---------- f'c = 3,000 PSI
   SLAB ON GRADE: ---------- f'c = 3,000 PSI
   CONCRETE TOPPING ---------- f'c = 4,000 PSI
   COLUMNS, WALLS, BEAMS, SUSPENDED SLAB -------- f'c = 4,000 PSI
   PRESTRESS/PRECAST DOUBLE TEE ---------- f'c = 6,000 PSI
   OTHERS ---------- f'c = 4,000 PSI

6. REINFORCEMENT

   REINFORCING STEEL: ——— FY = 60,000 PSI
   PRESTRESSING STEEL: ——— 1/2" DIAMETER 7-WIRE LOW RELAXATION STRANDS, GRADE 270 (270,000 PSI)

7. LOAD COMBINATIONS (IBC 2009)

   DL = DEAD LOAD — WL = WIND LOAD
   FL = FLOOR LOAD — EQ = EARTHQUAKE LOAD
   RL = ROOF LOAD — WR = ROOF WIND LOAD

COMB1:	1.4(DL)
COMB2:	1.2(DL) + 1.6(FL) + 0.5(RL)
COMB3:	1.2(DL) + 1.6(RL) + 0.5(FL)
COMB8 THRU 11:	1.2(DL) ± 1.0(EQX / EQY) + 0.5(FL)
COMB12 THRU 15:	0.9(DL) ± 1.6(WLX / WLY) + 1.6 (WR-)
COMB16 THRU 19:	0.9(DL) ± 1.0(EQX / EQY)
COMB41, 51, 61 &71 (WL CASE 1):	1.2(DL) + 0.5(FL) + 0.5(RL) ± 1.6(W2X/WLY) + 1.6(WR+)
COMB421, 521, 621 &721 (WL CASE 2):	1.2(DL) + 0.5(FL) + 0.5(RL) ± 1.6(W2X/WLY) + 1.6(WR+)
COMB422, 522, 622 &722 (WL CASE 2):	1.2(DL) + 0.5(FL) + 0.5(RL) ± 1.6(W2X/WLY) + 1.6(WR+)
COMB43 &53 (WI CASE 3):	1.2(DL) + 0.5(FL) + 0.5(RL) ± 1.6(W2X/WLY) + 1.6(WR+)
COMB441 &541 (WI CASE 4):	1.2(DL) + 0.5(FL) + 0.5(RL) ± 1.6(W2X/WLY) + 1.6(WR+)
COMB442 & 542 (WI CASE 4):	1.2(DL) + 0.5(FL) + 0.5(RL) ± 1.6(W2X/WLY) + 1.6(WR+)

8. CONCRETE COVERING

   TOP OF ROOF SLABS ---------- 1½"
   BOTTOM OF ROOF SLABS ---------- 1"
   TOP & BOTTOM INTERIOR FLOOR SLABS ---------- 1"
   TOP & BOTTOM EXTERIOR FLOOR SLABS ---------- 1½"
   WALLS (SMALLER THAN 10") ---------- 1½"
   WALLS (10" AND WIDER) ---------- 2"
   BEAMS (12" OR SMALLER) ---------- 1½"
   BEAMS (WIDER THEN 12") ---------- 2"
   COLUMNS ---------- 2"
   WALL EXPOSED TO EARTH ---------- 3"
   FORMED FOOTINGS ---------- 2"
   FOOTINGS CAST AGAINTS EARTH ---------- 3"

9. ALLOWABLE SOIL BEARING PRESSURES

   DL + LL — DL + LL + Wind (Earthquake)
   3000 psf (Assumed) — 4500 psf (Assumed)

10. STRUCTURAL STEEL

   SHAPES and PLATES: ---------- ASTM A36
   TUBES and PIPES: ---------- ASTM A500B
   BOLTS ---------- ASTM A325
   ANCHOR BOLTS: ---------- ASTM A307
   WELDING ELECTRODE: ---------- E70XX

SLAB REINFORCING

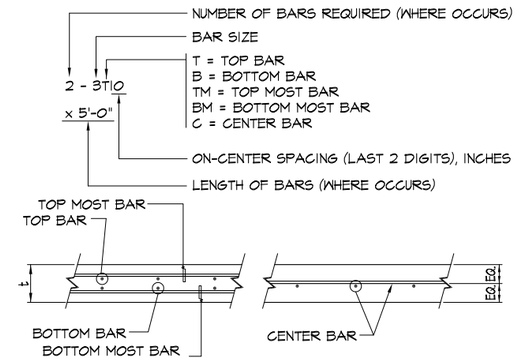

CHORD REINFORCING

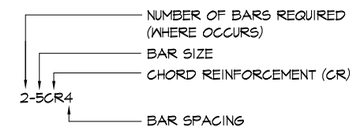

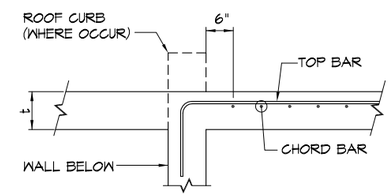

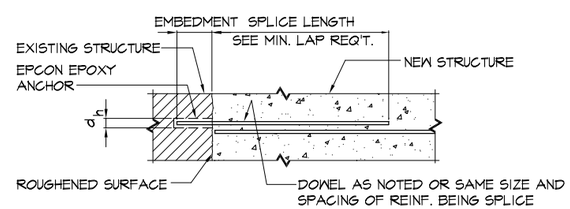

A DETAIL

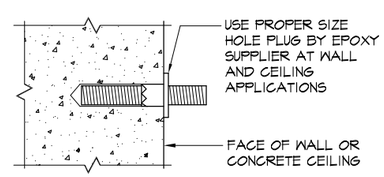

B CAP DETAIL

BAR SIZE	HOLE DIA. d_h	EMBEDMENT
#3	½"	6"
#4	⅝"	8"
#5	¾"	10"
#6	⅞"	12"

NOTE:

1. DRILL HOLE 1/8 INCH GREATER THAN REIN- FORCEMENT BAR DIAMETER SIZE AND TO THE PROPER DEPTHS AS INDICATED ON THE DRAWINGS (6" MINIMUM) AND INSPECTED PRIOR TO INSTALLATION OF THE EPOXY DOWELS.
2. DO NOT DISTURB EXISTING REBARS.
3. PROPERLY CLEAN HOLES WITH COMPRESSED AIR PRIOR TO APPLICATION OF EPOXY. ENGINEER'S INSPECTION OF DOWEL HOLE & OBSERVATION OF EPOXY INSTALLATION ARE REQUIRED DURING APPLICATIONS. HOLES SHALL BE CLEAN AND MOISTURE FREE AT TIME OF APPLICATION
4. USE EPCON SYSTEM BY RAMSET/REDHEAD OR APPROVED EQUAL.
5. PROVIDE PROPER SIZE HOLE PLUG BY EPOXY SUPPLIER AT WALL AND CEILING APPLICATIONS.

1 / S0.1 EPOXY ANCHOR DETAIL
NOT TO SCALE

IF SHEET IS LESS THAN 24" X 36"
REDUCED PRINT – USE GRAPHIC SCALES

REVISIONS

No.	Description	Date

TRMA
Taniguchi Ruth Makio Architects
100 Cliff Business Center, P.O. Box EA, Agana, GU 96910
Tel.: (671) 475-8772 • Fax.: (671) 472-3381
Architecture
Planning
Interior Design

dueñas camacho & associates inc
■ ENGINEERING (CIVIL/STRUCTURAL)
■ CONSTRUCTION MANAGEMENT ■ PLANNING
■ ENVIRONMENTAL SERVICES ■ SURVEYING
■ DEVELOPMENT CONSULTATION
■ GEOGRAPHIC INFORMATION SYSTEMS
P.O. Box 8900 Tamuning, Guam 96931

BID DOCUMENTS

THOMAS P. CAMACHO CERTIFICATE NO. 752 STRUCTURAL EXP. 04-30-13 GUAM PROFESSIONAL ENGINEER

I HEREBY CERTIFY THAT THIS PLAN WAS PREPARED BY ME OR UNDER MY DIRECT SUPERVISION

DATE: _____

Project:
GCC
BLDG 200 RENOVATION

Title:
STRUCTURAL DESIGN CRITERIA AND TYPICAL DETAILS

Designed:	TPC
Drawn:	PCP
Checked:	TPC
Supv:	TPC
Scale:	AS SHOWN
Date:	
Project No. 6611-07	AutoCAD File 661107-S0.1

Drawing No.
S0.1

Sheet No. _____ of _____

ACI 318-08 MINIMUM DEVELOPMENT (EMBEDMENT AND LAP REQUIRMENTS) (fy=60,000 psi FOR UNCOATED OR GALVANIZED COATED DEFORMED BARS)																			
MINIMUM EMBEDMENT REQUIREMENTS (INCHES)							MINIMUM LAP REQUIREMENTS (INCHES)												BAR SIZE
							CLASS "A" SPLICE						CLASS "B" SPLICE						
BAR SIZE	f'c = 3000 psi		f'c = 4000 psi		f'c = 6000 psi		f'c = 3000 psi		f'c = 4000 psi		f'c = 6000 psi		f'c = 3000 psi		f'c = 4000 psi		f'c = 6000 psi		
	TOP [2]	OTHERS	TOP [2]	OTHERS	TOP [2]	OTHERS	TOP [2]	OTHERS	TOP [2]	OTHERS	TOP [2]	OTHERS	TOP [2]	OTHERS	TOP [2]	OTHERS	TOP [2]	OTHERS	
#3	21	16	18	14	15	12	21	16	18	14	15	12	27	21	23	18	20	16	#3
#4	28	22	25	19	20	15	28	22	25	19	20	15	36	29	33	25	26	20	#4
#5	36	27	31	24	25	19	36	27	31	24	25	19	47	35	40	31	33	25	#5
#6	43	33	37	28	30	23	43	33	37	28	30	23	56	43	48	36	39	30	#6
#7	62	48	54	42	44	34	62	48	54	42	44	34	81	62	70	55	57	44	#7
#8	71	55	62	47	50	39	71	55	62	47	50	39	92	72	81	61	65	51	#8
#9	80	62	70	54	57	44	80	62	70	54	57	44	104	81	91	70	74	57	#9
#10	90	70	78	60	64	49	90	70	78	60	64	49	117	91	101	78	83	64	#10

EMBEDMENT AND LAP NOTES

1. PROVIDE STANDARD ACI 90 DEGREE BEND OR HOOK IF EMBEDMENT LENGTH IS LESS THAN REQUIRED MINIMUM AS SHOWN IN TABLE. REINFORCEMENT IN WALLS, SLAB, BEAM, ETC. SHALL BE EMBEDDED INTO SUPPORTING OR INTERSECTING STRUCTURAL ELEMENTS.
2. TOP BARS ARE DEFINE WHERE HORIZONTAL REINFORCEMENT IS PLACE SUCH THAT MORE THAN 12 INCHES OF FRESH CONCRETE IS CAST BELOW THE DEVELOPMENT LAP OR SPLICE.
3. FOR SLAB, LOCATE LAPS WITHIN THE MIDDLE THIRD OF THE SPANS FOR TOP BARS AND AT SUPPORTS FOR BOTTOM BARS. USE "CLASS A" SPLICE IF LAP ARE STAGGERED. OTHERWISE USE "CLASS B" SPLICE.
4. FOR WALLS, LOCATE LAPS ANYWHERE AND USE "CLASS B" SPLICE. FOR DOUBLE CURTAIN REINFORCEMENT, STAGGER LOCATION OF LAP FROM ONE CURTAIN TO ANOTHER.
5. FOR BEAM AND COLUMNS, LOCATE LAPS AS SHOWN IN DETAILS. USE "CLASS B" SPLICES UNLESS NOTED OTHERWISE.
6. FOR DEVELOPMENT LENGTH FOR INDIVIDUAL BARS WITHIN A BUNDLE, THE DEVELOPMENT LENGTH SHALL BE THAT OF THE INDIVIDUAL BAR, INCREASE 20 PERCENT FOR THE THREE-BAR BUNDLES AND 33 PERCENT FOR THE FOUR BAR BUNDLES.

GENERAL STRUCTURAL NOTES

1. "GENERAL NOTES AND TYPICAL DETAILS" APPLY TO ALL DRAWINGS UNLESS NOTED OR SHOWN OTHERWISE.
2. FEATURES OF CONSTRUCTION SHOWN ARE TYPICAL AND THEY SHALL APPLY GENERALLY THROUGHOUT FOR SIMILAR CONDITIONS.
3. BUILDING DIMENSIONS SHALL BE AS PER ARCHITECTURAL DRAWINGS UNLESS SHOWN OTHERWISE. CONTRACTOR SHALL VERIFY ALL DIMENSIONS BEFORE WORK IS BEGUN.
4. SLAB ELEVATION SHALL BE COORDINATE WITH ARCHITECTURAL DRAWINGS. PROVIDE SLAB DEPRESSIONS AS REQUIRED FOR VARIOUS FLOOR FINISHES.
5. GEOTECHNICAL SERVICES: THE CONTRACTOR SHALL RETAIN THE SERVICES OF A PROFESSIONAL CIVIL (GEOTECHNICAL) ENGINEER WHO IS CURRENTLY REGISTERED IN GUAM WITH EMPHASIS AND KNOWLEDGE IN THE FIELD OF GEOTECHNICAL ENGINEERING AND SHALL BE REFERRED TO AS THE "GEOTECHNICAL ENGINEER," THE SERVICES OF THE GEOTECHNICAL ENGINEER SHALL BE INCLUDED AS INCIDENTAL SERVICES COVERED UNDER THE EARTHWORK SCOPE BID ITEMS. THE CONTRACTOR SHALL BE UNDER THE DIRECT SUPERVISION OF THE GEOTECHNICAL ENGINEER WHO SHALL DIRECTLY SUPERVISE THE SITE EXCAVATION, SUBGRADE PREPARATION, BACKFILLING, COMPACTION AND TESTING IN ACCORDANCE WITH THE RECOMMENDATIONS OUTLINED IN THE GEOTECHNICAL INVESTIGATION REPORT FOR THIS PROJECT.

ACI 318-08 MINIMUM DEVELOPMENT REQUIRMENTS OF STANDARD HOOKS IN TENSION (fy=60,000 psi FOR UNCOATED OR GALVANIZED COATED DEFORMED BARS)						
BAR SIZE	MINIMUM HOOK LENGTH (HL) REQUIREMENTS		l_{dh} = "C" (DEVELOPMENT LENGTH REQUIREMENT FROM CRITICAL SECTION)			MINIMUM BEND DIAMETER (D)
	90°(a)	180°(b)	3000 psi (c)	4000 psi (c)	6000 psi (c)	
#3	6	4	6	6	6	1 1/2"
#4	8	5	8	7	6	2"
#5	10	5	10	9	6	2 1/2"
#6	12	6	12	10	6	3"
#7	14	7	14	12	7	3 1/2"
#8	16	8	16	14	8	4"
#9	20	11	18	15	9	5 3/16"
#10	22	12	20	17	10	6 3/8"

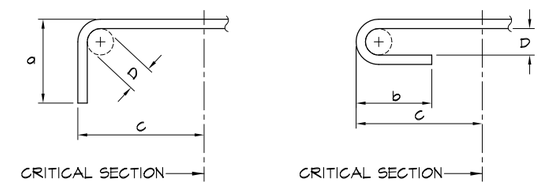

PRIMARY REINFORCING TYPICAL BENDS

NOT TO SCALE

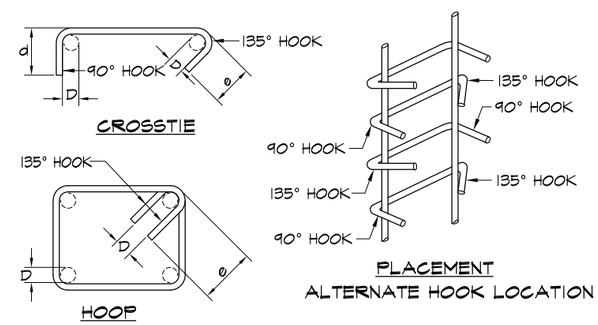

ACI 318-08 (SECTION 7.1.3) MINIMUM DEVELOPMENT REQUIRMENTS OF HOOPS AND CROSS TIES (fy=60,000 psi FOR UNCOATED OR GALVANIZED COATED DEFORMED BARS)			
BAR SIZE	MINIMUM HOOK LENGTH (HL) REQUIREMENTS		MINIMUM BEND DIAMETER (D)
	90° (d)	135° (e)	
#3	4	5	1 1/2"
#4	5	5	2"
#5	7	7	2 1/2"
#6	14	9	4 1/2"
#7	16	11	5 1/4"
#8	18	12	6"

TYP. HOOPS AND CROSS-TIES DETAIL

NOT TO SCALE

IF SHEET IS LESS THAN 24" X 36"
REDUCED PRINT – USE GRAPHIC SCALES

REVISIONS

No.	Description	Date

TRMA
Taniguchi Ruth Makio Architects
100 Cliff Business Center, P.O. Box EA, Agana, GU 96910
Tel.: (671) 475-8772 • Fax.: (671) 472-3381
Architecture
Planning
Interior Design

dueñas camacho & associates inc
■ ENGINEERING (CIVIL/STRUCTURAL)
■ CONSTRUCTION MANAGEMENT ■ PLANNING
■ ENVIRONMENTAL SERVICES ■ SURVEYING
■ DEVELOPMENT CONSULTATION
■ GEOGRAPHIC INFORMATION SYSTEMS
P.O. Box 8900 Tamuning, Guam 96931

BID DOCUMENTS

THOMAS P. CAMACHO CERTIFICATE NO. 752 STRUCTURAL EXP. 04-30-13 GUAM PROFESSIONAL ENGINEER

I HEREBY CERTIFY THAT THIS PLAN WAS PREPARED BY ME OR UNDER MY DIRECT SUPERVISION

DATE: _____

Project:
GCC
BLDG 200 RENOVATION

Title:
REINFORCING SCHEDULE AND TYPICAL DETAILS

Designed:	TPC
Drawn:	PCP
Checked:	TPC
Supv:	TPC
Scale:	AS SHOWN
Date:	
Project No. 6611-07	AutoCAD File 661107-S0.2

Drawing No.
S0.2

Sheet No. _____ of _____

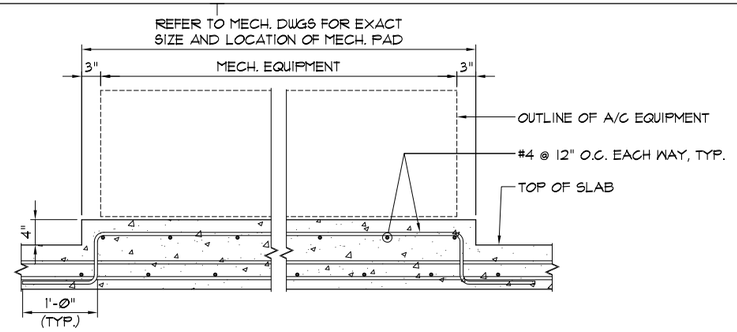

5 / S0.3 TYP. A/C PAD ON SUSPENDED SLAB

NOT TO SCALE

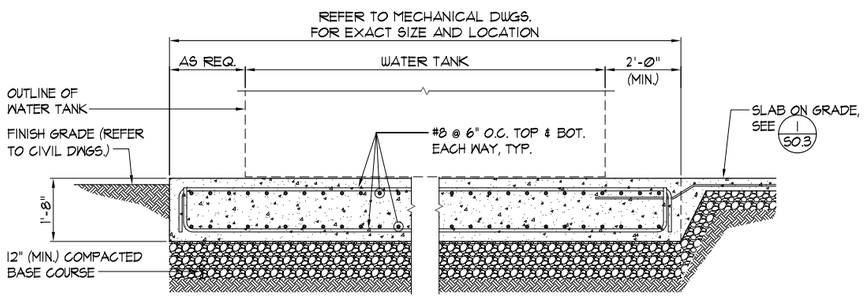

4 / S0.3 WATER TANK SLAB-ON-GRADE DETAIL

NOT TO SCALE

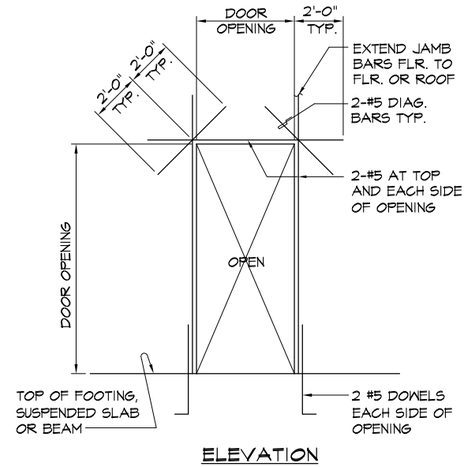

ELEVATION

CONC. WALL DOOR OPENING

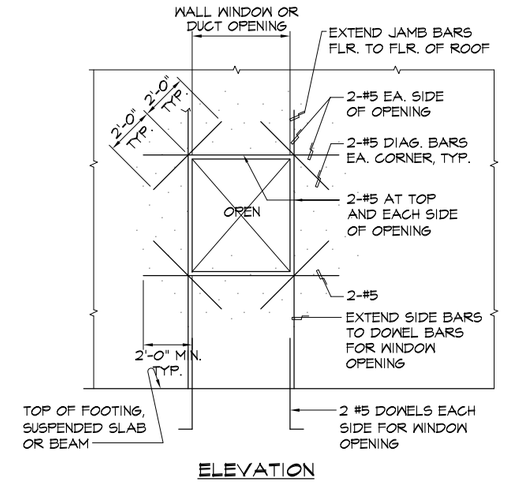

ELEVATION

CONC. WALL WINDOW/DUCT OPENING

2 / S0.3 TYP. WALL OPENING DETAIL

NOT TO SCALE

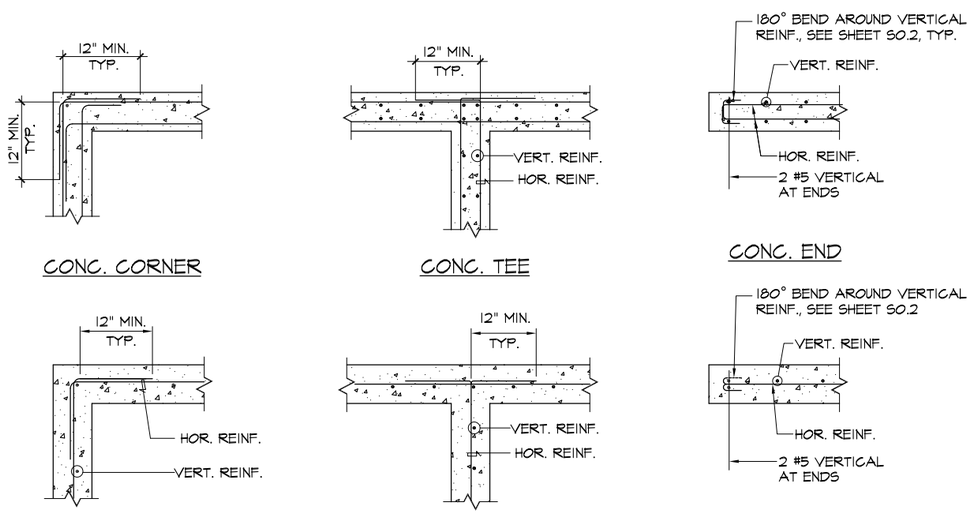

3 / S0.3 TYP. CONCRETE WALL CONNTECTIONS

NOT TO SCALE

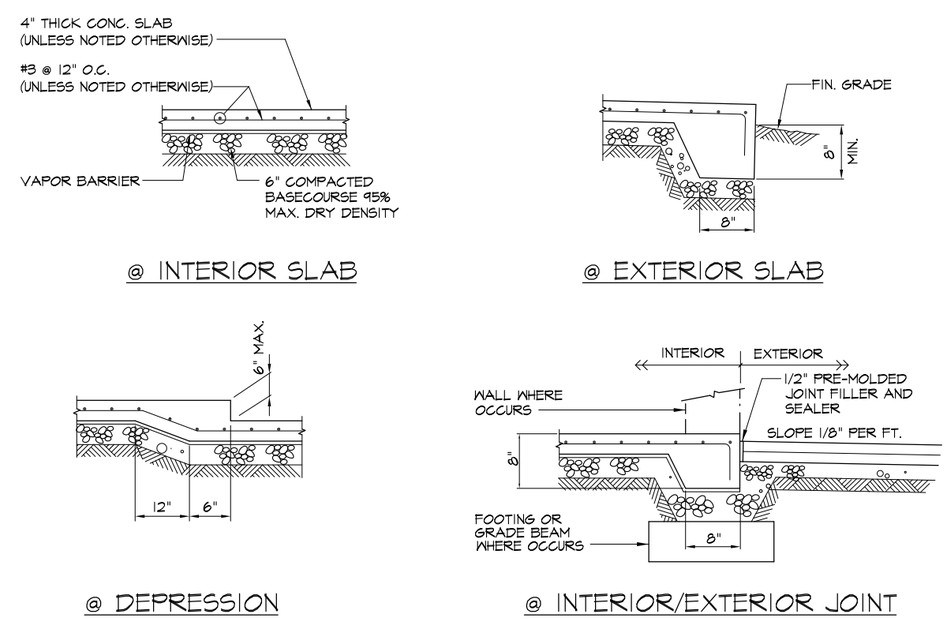

1 / S0.3 TYP. SLAB ON GRADE DETAIL

NOT TO SCALE

IF SHEET IS LESS THAN 24" X 36"
REDUCED PRINT – USE GRAPHIC SCALES

REVISIONS

No.	Description	Date

TRMA
Taniguchi Ruth Makio Architects
100 Cliff Business Center, P.O. Box EA, Agana, GU 96910
Tel.: (671) 475-8772 • Fax.: (671) 472-3381
Architecture
Planning
Interior Design

dueñas camacho & associates inc
■ ENGINEERING (CIVIL/STRUCTURAL)
■ CONSTRUCTION MANAGEMENT ■ PLANNING
■ ENVIRONMENTAL SERVICES ■ SURVEYING
■ DEVELOPMENT CONSULTATION
■ GEOGRAPHIC INFORMATION SYSTEMS
P.O. Box 8900 Tamuning, Guam 96931

BID DOCUMENTS

THOMAS P. CAMACHO
CERTIFICATE
NO. 752
STRUCTURAL
EXP. 04-30-13
GUAM
PROFESSIONAL ENGINEER

I HEREBY CERTIFY THAT THIS PLAN WAS PREPARED BY ME OR UNDER MY DIRECT SUPERVISION

DATE: _____

Project:

GCC

BLDG 200 RENOVATION

Title:

TYPICAL DETAILS

Designed:	TPC
Drawn:	PCP
Checked:	TPC
Supv:	TPC
Scale:	AS SHOWN
Date:	
Project No. GG11-07	AutoCAD File GG1107-S0.3

Drawing No.

S0.3

Sheet No. _____ of _____

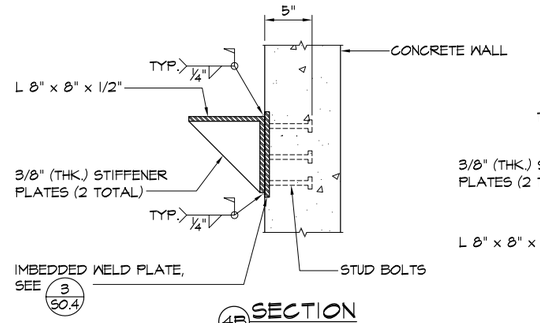

4B SECTION

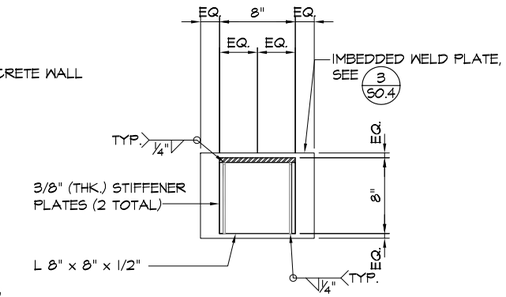

4A ELEVATION

4/S0.4 STEEL CORBEL DETAIL

SCALE: 1 1/2"= 1'-0"

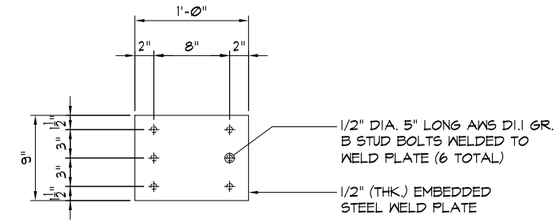

NOTE:

WELDED STUDS MAY BE MOVED SLIGHTLY IN ORDER TO AVOID REINF. STEEL.

3/S0.4 IMBEDDED WELD PLATE DETAIL

SCALE: 1 1/2"= 1'-0"

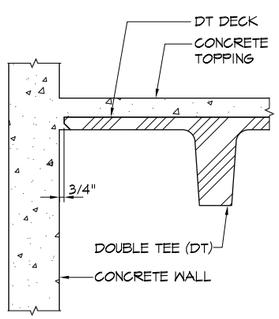

2F @ ROOF/WALL CONNECTION

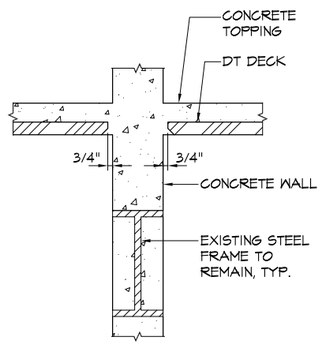

2E @ DT / STEEL MAIN FRAME

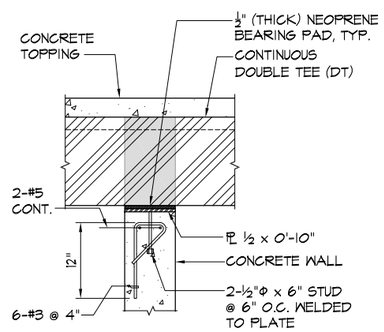

2D @ DT WALL SLUT @ INTERIOR WALL

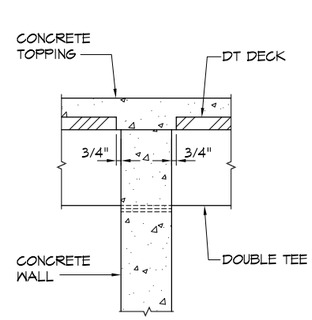

2C @ CONTINUOUS WALL

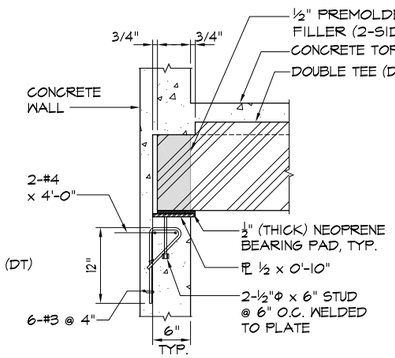

2B @ DT END

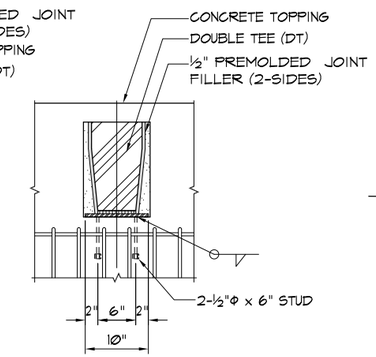

2A ELEVATION

2/S0.4 TYPICAL DOUBLE TEE TO WALL CONNECTION DETAILS

NOT TO SCALE

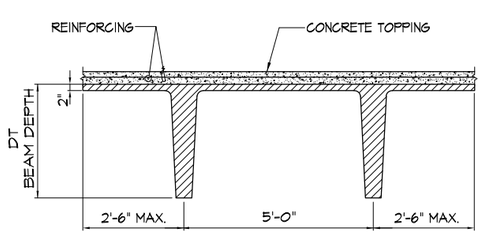

1B SECTION

NOTE: DOUBLE TEE DETAIL SHOWN IS APPLICABLE TO MAXIMUM SPAN CONDITION. MANUFACTURER SHALL DESIGN OTHER LENGTHS TO BE COMPATIBLE WITH THE MAXIMUM SPAN SHOWN. DESIGN SHALL CONSIDER DIFFERENCES IN CAMBER REQUIREMENT FOR ADJACENT DOUBLE TEES OF UNEQUAL LENGTHS.

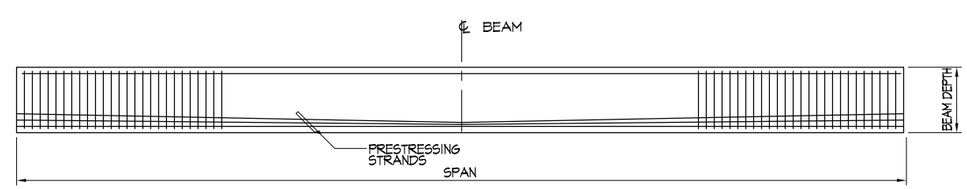

1A ELEVATION

1/S0.4 TYPICAL DOUBLE TEE DETAIL

NOT TO SCALE

IF SHEET IS LESS THAN 24" X 36" REDUCED PRINT – USE GRAPHIC SCALES

REVISIONS

No.	Description	Date

TRMA
Taniguchi Ruth Makio Architects
100 Cliff Business Center, P.O. Box EA, Agana, GU 96910
Tel.: (671) 475-8772 • Fax.: (671) 472-3381
Architecture
Planning
Interior Design

dueñas camacho & associates inc
■ ENGINEERING (CIVIL/STRUCTURAL)
■ CONSTRUCTION MANAGEMENT ■ PLANNING
■ ENVIRONMENTAL SERVICES ■ SURVEYING
■ DEVELOPMENT CONSULTATION
■ GEOGRAPHIC INFORMATION SYSTEMS
P.O. Box 8900 Tamuning, Guam 96931

BID DOCUMENTS

THOMAS P. CAMACHO CERTIFICATE NO. 752 STRUCTURAL EXP. 04-30-13 GUAM PROFESSIONAL ENGINEER

I HEREBY CERTIFY THAT THIS PLAN WAS PREPARED BY ME OR UNDER MY DIRECT SUPERVISION

DATE: _____

Project:

GCC

BLDG 200 RENOVATION

Title:

TYPICAL DETAILS

Designed:	TPC
Drawn:	PCP
Checked:	TPC
Supv:	TPC
Scale:	AS SHOWN
Date:	
Project No. 6611-07	AutoCAD File 661107-S0.4

Drawing No.

S0.4

Sheet No. _____ of _____

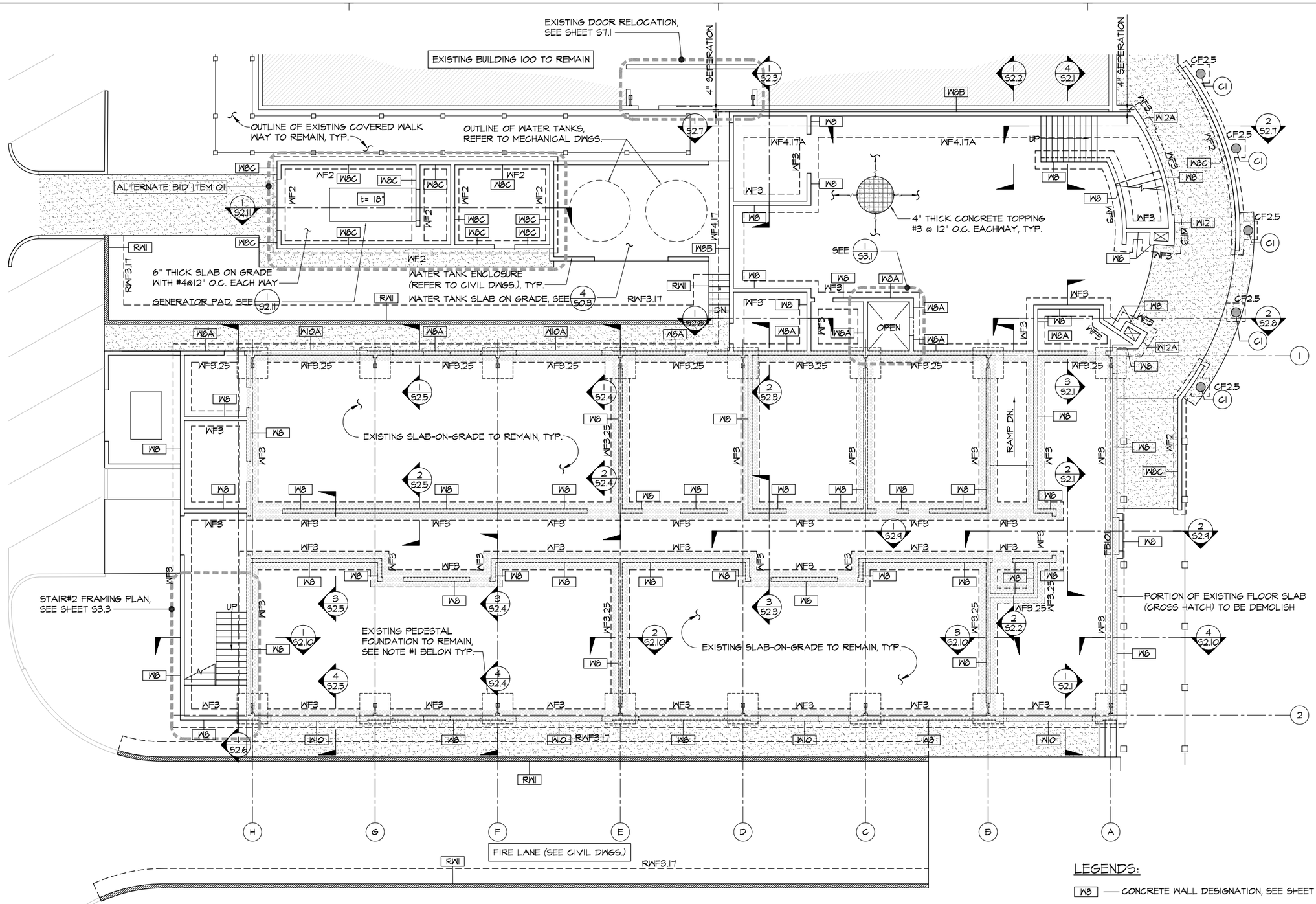

1 FOUNDATION PLAN
S1.1 SCALE: 1/8"= 1'-0"

NOTE:

1. EXACT LOCATION, SIZE AND DEPTH OF EXISTING COLUMN FOOTING AND PEDESTAL SHALL BE FIELD VERIFIED. THE CONTRACTOR SHALL NOTIFY THE ENGINEER IF ACTUAL CONDITIONS DIFFER FROM WHAT IS SHOWN.

LEGENDS:

- WB — CONCRETE WALL DESIGNATION, SEE SHEET S5.1
- RW1 — CONCRETE RETAINING WALL DESIGNATION, SEE SHEET S5.2
- WF3 — WALL FOOTING DESIGNATION, SEE SHEET S5.1
- RWF3.17 — RETAINING WALL FOOTING DESIGNATION, SEE SHEET S5.2
- CF3 — COLUMN FOOTING DESIGNATION, SEE SHEET S4.1
- (C1) — CONCRETE COLUMN DESIGNATION, SEE SHEET S4.1
- FB101 — FLOOR BEAM DESIGNATION, SEE SHEET S6.1

IF SHEET IS LESS THAN 24" X 36" REDUCED PRINT – USE GRAPHIC SCALES

REVISIONS

No.	Description	Date

TRMA
Taniguchi Ruth Makio Architects
100 Cliff Business Center, P.O. Box EA, Agana, GU 96910
Tel.: (671) 475-8772 • Fax.: (671) 472-3381
Architecture
Planning
Interior Design

dueñas camacho & associates inc
■ ENGINEERING (CIVIL/STRUCTURAL)
■ CONSTRUCTION MANAGEMENT ■ PLANNING
■ ENVIRONMENTAL SERVICES ■ SURVEYING
■ DEVELOPMENT CONSULTATION
■ GEOGRAPHIC INFORMATION SYSTEMS
P.O. Box 8900 Tamuning, Guam 96931

BID DOCUMENTS

THOMAS P. CAMACHO CERTIFICATE NO. 752 STRUCTURAL EXP. 04-30-13 GUAM PROFESSIONAL ENGINEER

I HEREBY CERTIFY THAT THIS PLAN WAS PREPARED BY ME OR UNDER MY DIRECT SUPERVISION

DATE: _____

Project:
GCC
BLDG 200 RENOVATION

Title:
FOUNDATION PLAN

Designed:	TPC
Drawn:	PCP
Checked:	TPC
Supv:	TPC
Scale:	AS SHOWN
Date:	
Project No. GG11-07	AutoCAD File GG1107-S1.1

Drawing No.
S1.1

Sheet No. _____ of _____

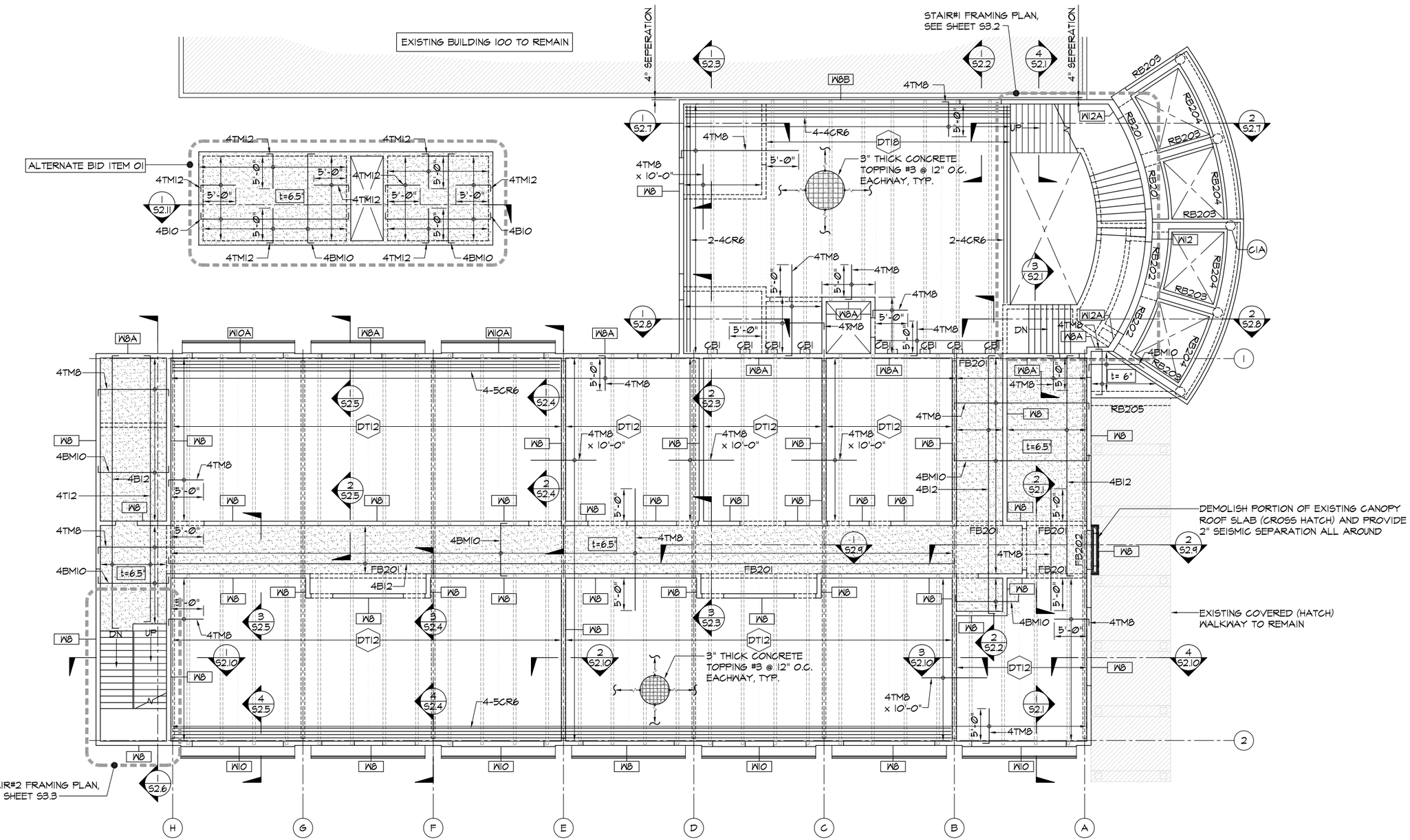

1 / S1.2 2ND FLOOR LAYOUT AND FRAMING PLAN

SCALE: 1/8"= 1'-0"

LEGENDS:

- W8 — CONCRETE WALL DESIGNATION, SEE SHEET S5.1
- FB201 — FLOOR BEAM DESIGNATION, SEE SHEET S6.1
- RB201 — ROOF BEAM DESIGNATION, SEE SHEET S6.1
- CBI — CORBEL BEAM DESIGNATION (4 / S0.4)
- C1A — CONCRETE COLUMN DESIGNATION, SEE SHEET S4.1
- DT — PRE-ENGINEERED/ PRE-MANUFACTURED PRE-STRESS/PRECAST DOUBLE TEE

IF SHEET IS LESS THAN 24" X 36" REDUCED PRINT – USE GRAPHIC SCALES

REVISIONS

No.	Description	Date

TRMA
Taniguchi Ruth Makio Architects
100 Cliff Business Center, P.O. Box EA, Agana, GU 96910
Tel.: (671) 475-8772 • Fax.: (671) 472-3381
Architecture
Planning
Interior Design

dueñas camacho & associates inc
■ ENGINEERING (CIVIL/STRUCTURAL) ■ CONSTRUCTION MANAGEMENT ■ PLANNING
■ ENVIRONMENTAL SERVICES ■ SURVEYING
■ DEVELOPMENT CONSULTATION
■ GEOGRAPHIC INFORMATION SYSTEMS
P.O. Box 8950 Tamuning, Guam 96931

BID DOCUMENTS

THOMAS P. CAMACHO CERTIFICATE NO. 752 STRUCTURAL EXP. 04-30-13 GUAM PROFESSIONAL ENGINEER

I HEREBY CERTIFY THAT THIS PLAN WAS PREPARED BY ME OR UNDER MY DIRECT SUPERVISION

DATE: _____

Project:

GCC

BLDG 200 RENOVATION

Title:

2ND FLOOR LAYOUT AND FRAMING PLAN

Designed:	TPC
Drawn:	PCP
Checked:	TPC
Supv:	TPC
Scale:	AS SHOWN
Date:	
Project No. 6611-07	AutoCAD File 661107-S1.2

Drawing No.

S1.2

Sheet No. _____ of _____

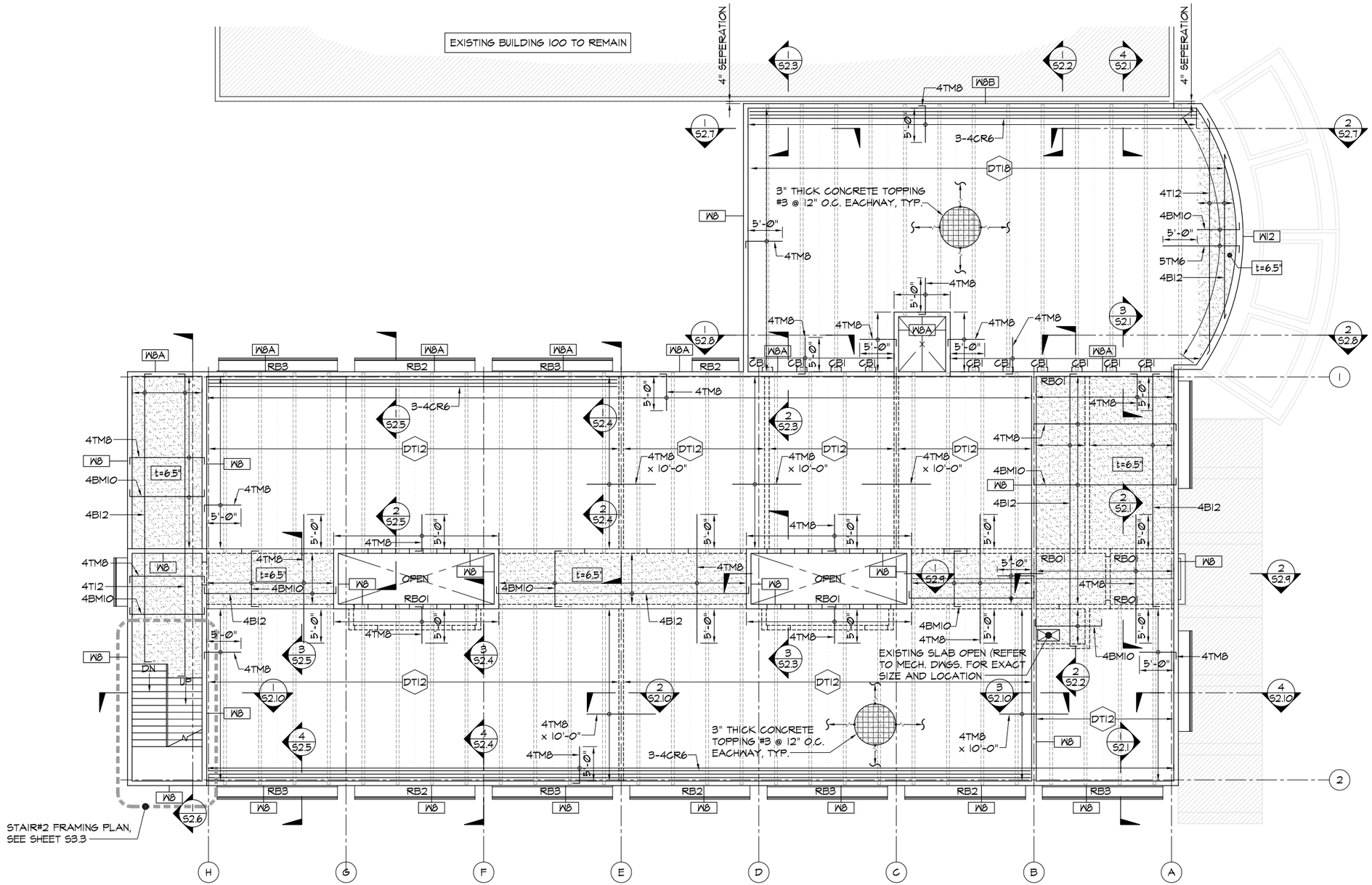

1 / S1.3 ROOF FRAMING PLAN

SCALE: 1/8"= 1'-0"

LEGENDS:

WB	CONCRETE WALL DESIGNATION, SEE SHEET S5.1
RB01	ROOF BEAM DESIGNATION, SEE SHEET S6.1
CB1	CORBEL BEAM DESIGNATION (4 / S0.4)
DT	PRE-ENGINEERED/ PRE-MANUFACTURED PRE-STRESS/PRECAST DOUBLE TEE

IF SHEET IS LESS THAN 24" X 36"
REDUCED PRINT – USE GRAPHIC SCALES

REVISIONS

No.	Description	Date

TRMA
Taniguchi Ruth Makio Architects
100 Cliff Business Center, P.O. Box EA, Agana, GU 96910
Tel.: (671) 475-8772 • Fax.: (671) 472-3381
Architecture
Planning
Interior Design

dueñas camacho & associates inc
■ ENGINEERING (CIVIL/STRUCTURAL) ■ CONSTRUCTION MANAGEMENT ■ PLANNING
■ ENVIRONMENTAL SERVICES ■ SURVEYING
■ DEVELOPMENT CONSULTATION
■ GEOGRAPHIC INFORMATION SYSTEMS
P.O. Box 8950 Tamuning, Guam 96931

BID DOCUMENTS

THOMAS P. CAMACHO CERTIFICATE NO. 752 STRUCTURAL EXP. 04-30-13 GUAM PROFESSIONAL ENGINEER

I HEREBY CERTIFY THAT THIS PLAN WAS PREPARED BY ME OR UNDER MY DIRECT SUPERVISION

DATE: _____

Project:
GCC
BLDG 200 RENOVATION

Title:
ROOF FRAMING PLAN

Designed:	TPC
Drawn:	PCP
Checked:	TPC
Supv:	TPC
Scale:	AS SHOWN
Date:	
Project No. 6611-07	AutoCAD File 6611107-S1.3

Drawing No.
S1.3

Sheet No. _____ of _____

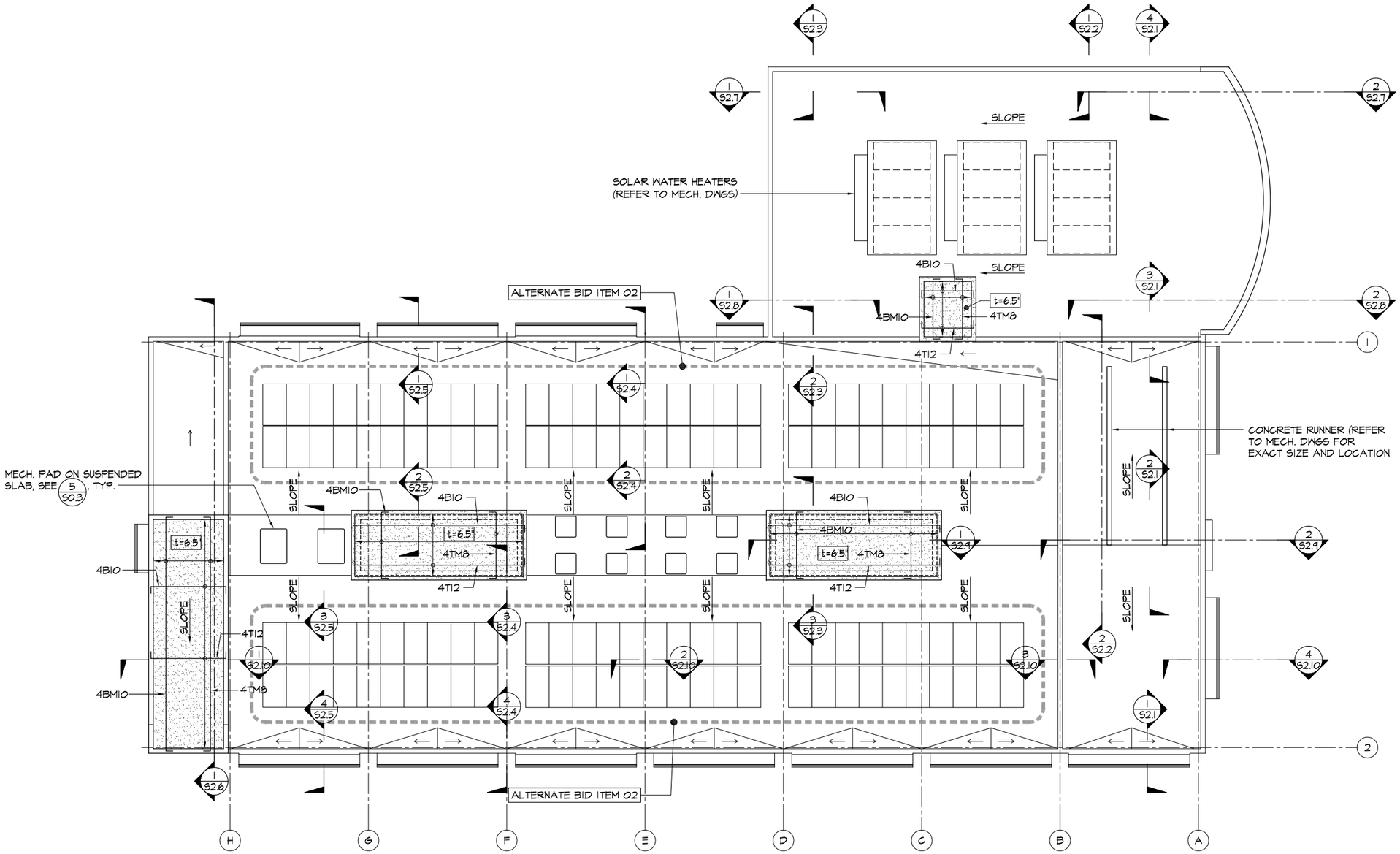

1/S1.4 UPPER ROOF FRAMING PLAN

SCALE: 1/8"= 1'-0"

IF SHEET IS LESS THAN 24" X 36"
REDUCED PRINT – USE GRAPHIC SCALES

REVISIONS		
No.	Description	Date

TRMA
Taniguchi Ruth Makio Architects
100 Cliff Business Center, P.O. Box EA, Agana, GU 96910
Tel.: (671) 475-8772 • Fax.: (671) 472-3381
Architecture
Planning
Interior Design

dueñas camacho & associates inc
■ ENGINEERING (CIVIL/STRUCTURAL)
■ CONSTRUCTION MANAGEMENT ■ PLANNING
■ ENVIRONMENTAL SERVICES ■ SURVEYING
■ DEVELOPMENT CONSULTATION
■ GEOGRAPHIC INFORMATION SYSTEMS
P.O. Box 8950 Tamuning, Guam 96931

BID DOCUMENTS

THOMAS P. CAMACHO
CERTIFICATE
NO. 752
STRUCTURAL
EXP. 04-30-13
GUAM
PROFESSIONAL ENGINEER

I HEREBY CERTIFY THAT THIS PLAN WAS PREPARED BY ME OR UNDER MY DIRECT SUPERVISION

DATE: _____

Project:

GCC

BLDG 200 RENOVATION

Title:

UPPER ROOF FRAMING PLAN

Designed:	TPC
Drawn:	PCP
Checked:	TPC
Supv:	TPC
Scale:	AS SHOWN
Date:	
Project No. GG11-07	AutoCAD File GG1107-S1.4

Drawing No.

S1.4

Sheet No. _____ of _____

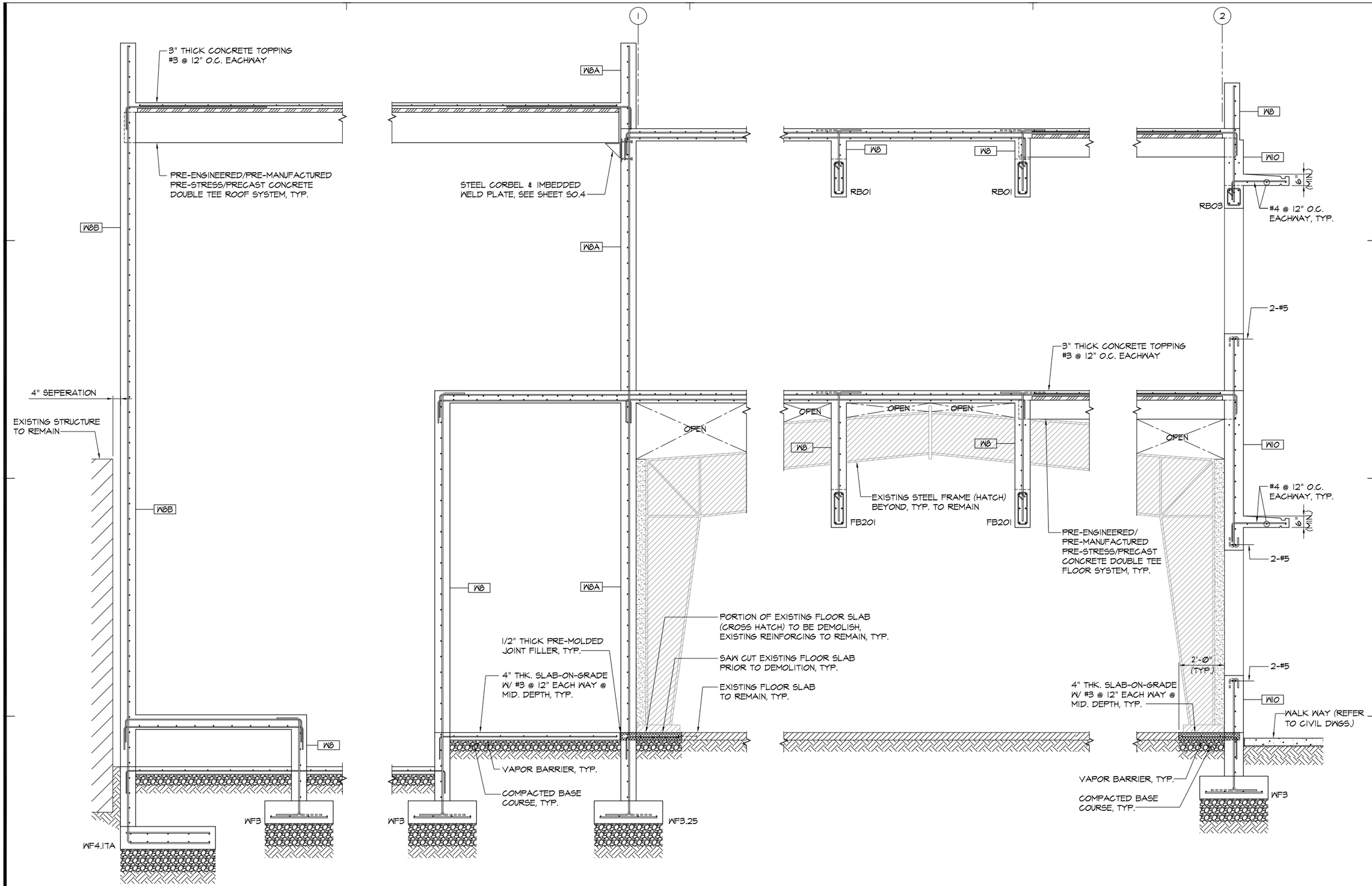

4 / S2.1 SECTION
SCALE: 1/2"= 1'-0"

3 / S2.1 SECTION
SCALE: 1/2"= 1'-0"

2 / S2.1 SECTION
SCALE: 1/2"= 1'-0"

1 / S2.1 SECTION
SCALE: 1/2"= 1'-0"
IF SHEET IS LESS THAN 24" X 36"
REDUCED PRINT – USE GRAPHIC SCALES

REVISIONS		
No.	Description	Date

TRMA
Taniguchi Ruth Makio Architects
100 Cliff Business Center, P.O. Box EA, Agana, GU 96910
Tel.: (671) 475-8772 • Fax.: (671) 472-3381
Architecture
Planning
Interior Design

dueñas camacho & associates inc
■ ENGINEERING (CIVIL/STRUCTURAL)
■ CONSTRUCTION MANAGEMENT ■ PLANNING
■ ENVIRONMENTAL SERVICES ■ SURVEYING
■ DEVELOPMENT CONSULTATION
■ GEOGRAPHIC INFORMATION SYSTEMS
P.O. Box 8950 Tamuning, Guam 96931

BID DOCUMENTS

THOMAS P. CAMACHO
CERTIFICATE
NO. 752
STRUCTURAL
EXP. 04-30-13
GUAM
PROFESSIONAL ENGINEER

I HEREBY CERTIFY THAT THIS PLAN WAS PREPARED BY ME OR UNDER MY DIRECT SUPERVISION

DATE: _____

Project:
GCC
BLDG 200 RENOVATION

Title:
SECTIONS

Designed:	TPC
Drawn:	PCP
Checked:	TPC
Supv:	TPC
Scale:	AS SHOWN
Date:	
Project No. 6611-07	AutoCAD File 661107-S2.1

Drawing No.
S2.1

Sheet No. _____ of _____

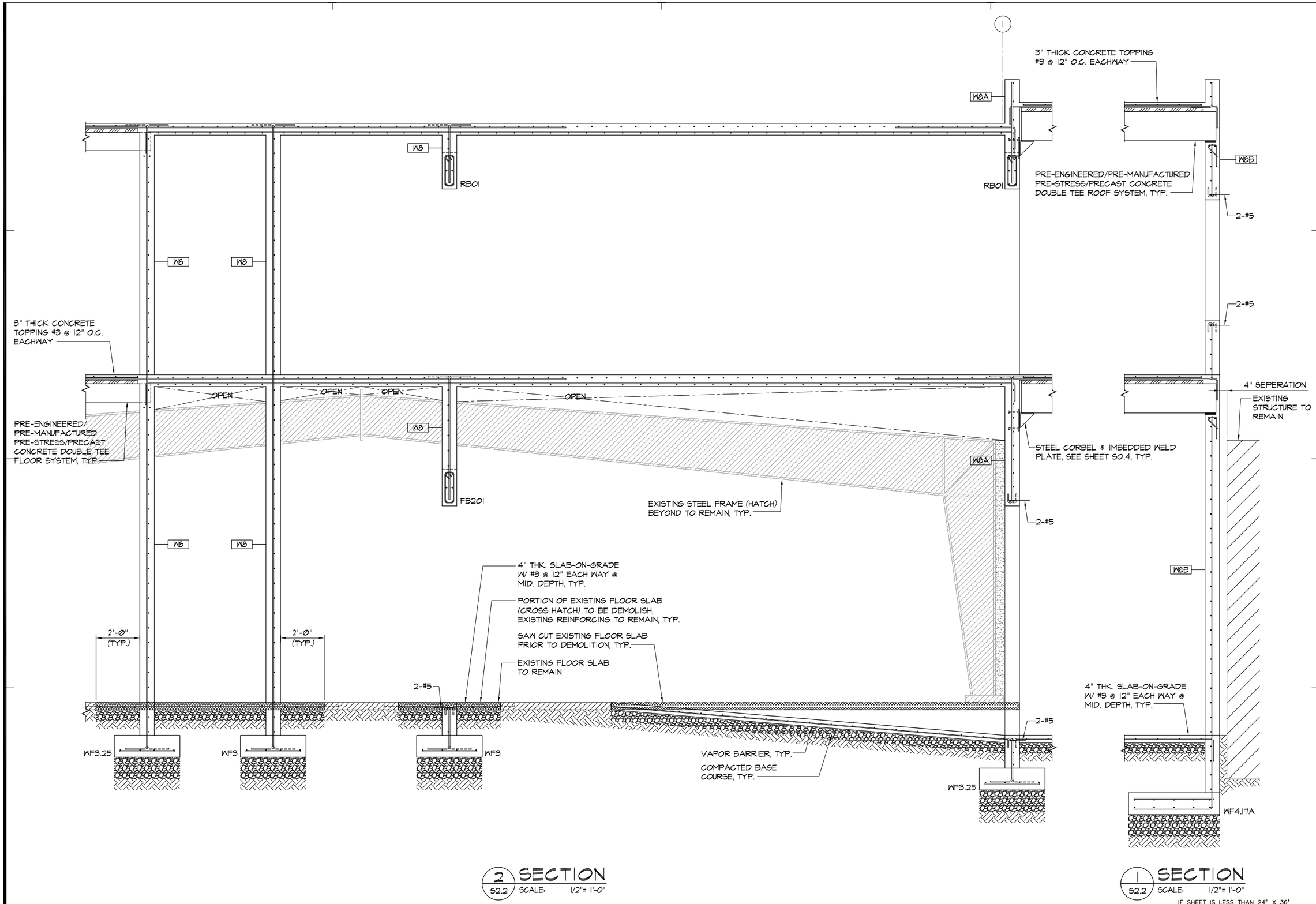

2 SECTION
S2.2 SCALE: 1/2"= 1'-0"

1 SECTION
S2.2 SCALE: 1/2"= 1'-0"

IF SHEET IS LESS THAN 24" X 36" REDUCED PRINT – USE GRAPHIC SCALES

REVISIONS		
No.	Description	Date

TRMA
Taniguchi Ruth Makio Architects
100 Cliff Business Center, P.O. Box EA, Agana, GU 96910
Tel.: (671) 475-8772 • Fax.: (671) 472-3381
Architecture
Planning
Interior Design

dueñas camacho & associates inc
■ ENGINEERING (CIVIL/STRUCTURAL) ■ CONSTRUCTION MANAGEMENT ■ PLANNING
■ ENVIRONMENTAL SERVICES ■ SURVEYING
■ DEVELOPMENT CONSULTATION
■ GEOGRAPHIC INFORMATION SYSTEMS
P.O. Box 8950 Tamuning, Guam 96931

BID DOCUMENTS

THOMAS P. CAMACHO CERTIFICATE NO. 752 STRUCTURAL EXP. 04-30-12 GUAM PROFESSIONAL ENGINEER

I HEREBY CERTIFY THAT THIS PLAN WAS PREPARED BY ME OR UNDER MY DIRECT SUPERVISION

DATE: _____

Project:
GCC
BLDG 200 RENOVATION

Title:
SECTIONS

Designed:	TPC
Drawn:	PCP
Checked:	TPC
Supv:	TPC
Scale:	AS SHOWN
Date:	
Project No. GG11-07	AutoCAD File GG1107-S2.2

Drawing No.
S2.2

Sheet No. _____ of _____

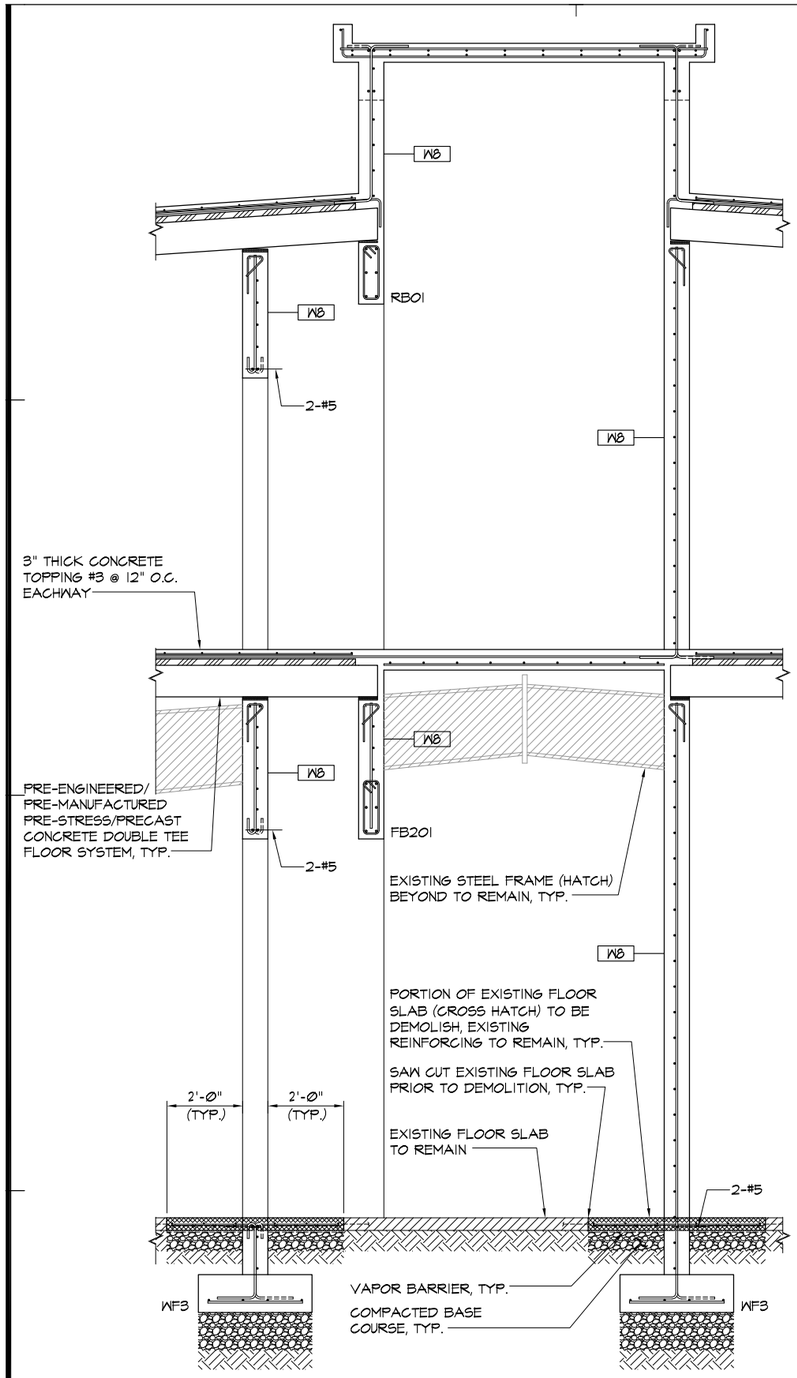

3 SECTION
S2.3 SCALE: 1/2"= 1'-0"

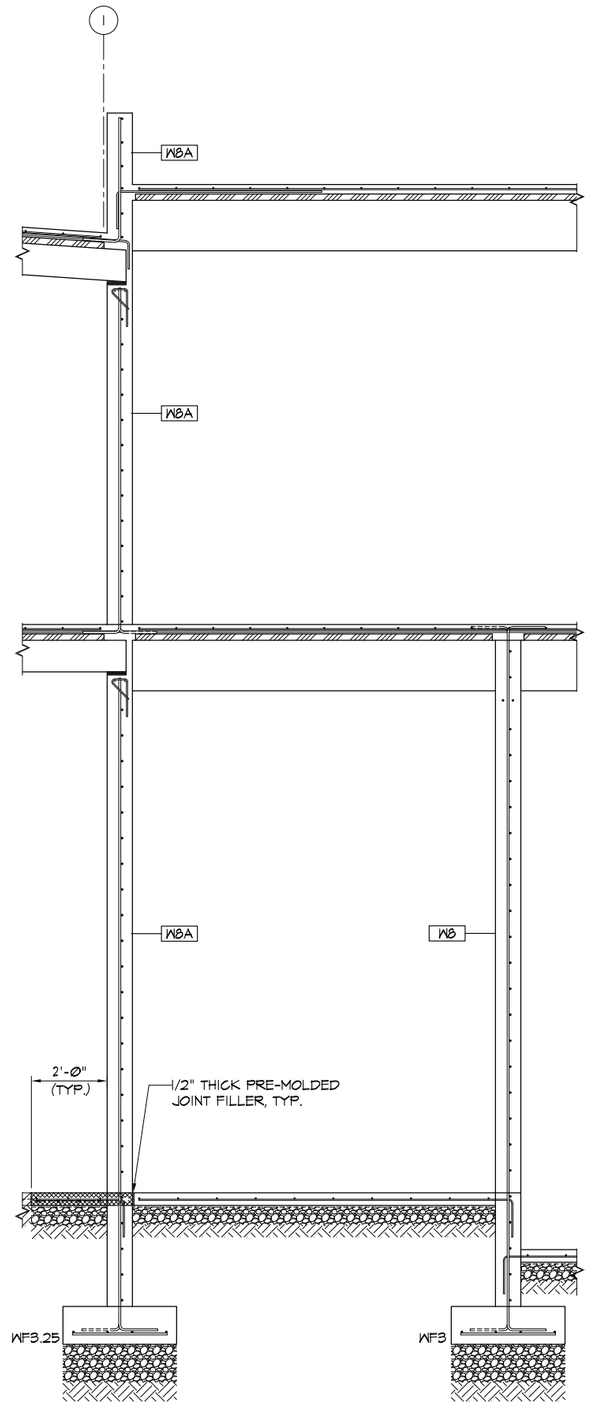

2 SECTION
S2.3 SCALE: 1/2"= 1'-0"

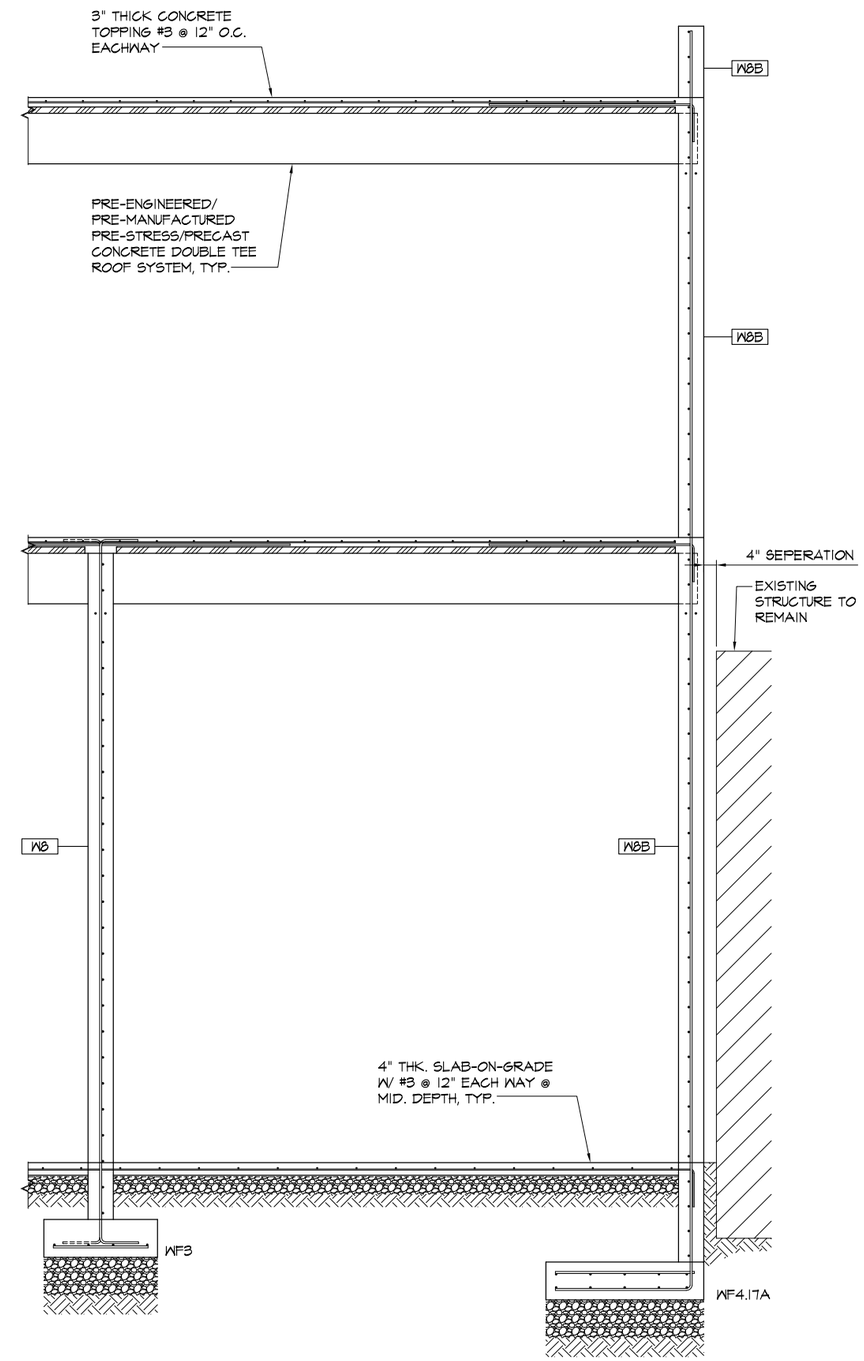

1 SECTION
S2.3 SCALE: 1/2"= 1'-0"

IF SHEET IS LESS THAN 24" X 36"
REDUCED PRINT – USE GRAPHIC SCALES

REVISIONS

No.	Description	Date

TRMA
Taniguchi Ruth Makio Architects
100 Cliff Business Center, P.O. Box EA, Agana, GU 96910
Tel.: (671) 475-8772 • Fax.: (671) 472-3381
Architecture
Planning
Interior Design

dueñas camacho & associates inc
■ ENGINEERING (CIVIL/STRUCTURAL)
■ CONSTRUCTION MANAGEMENT ■ PLANNING
■ ENVIRONMENTAL SERVICES ■ SURVEYING
■ DEVELOPMENT CONSULTATION
■ GEOGRAPHIC INFORMATION SYSTEMS
P.O. Box 8950 Tamuning, Guam 96931

BID
DOCUMENTS

THOMAS P. CAMACHO
CERTIFICATE
NO. 752
STRUCTURAL
EXP. 04-30-13
GUAM
PROFESSIONAL ENGINEER

I HEREBY CERTIFY THAT THIS PLAN WAS PREPARED BY ME OR UNDER MY DIRECT SUPERVISION

DATE: _____

Project:
GCC
BLDG 200 RENOVATION

Title:
SECTIONS

Designed:	TPC
Drawn:	PCP
Checked:	TPC
Supv:	TPC
Scale:	AS SHOWN
Date:	
Project No. 6611-07	AutoCAD File 661107-S2.3

Drawing No.
S2.3

Sheet No. _____ of _____

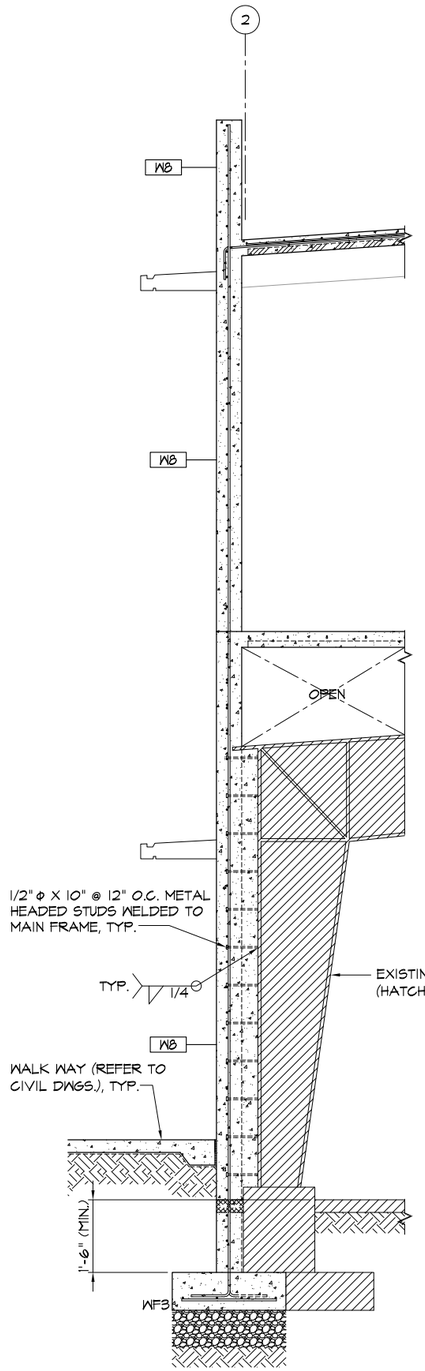

4 S2.4 SECTION
SCALE: 1/2"= 1'-0"

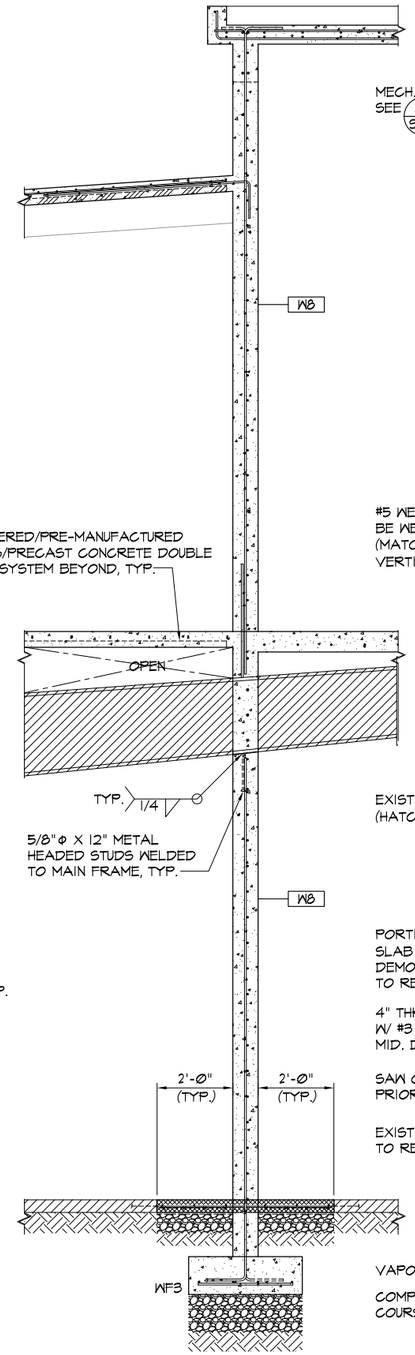

3 S2.4 SECTION
SCALE: 1/2"= 1'-0"

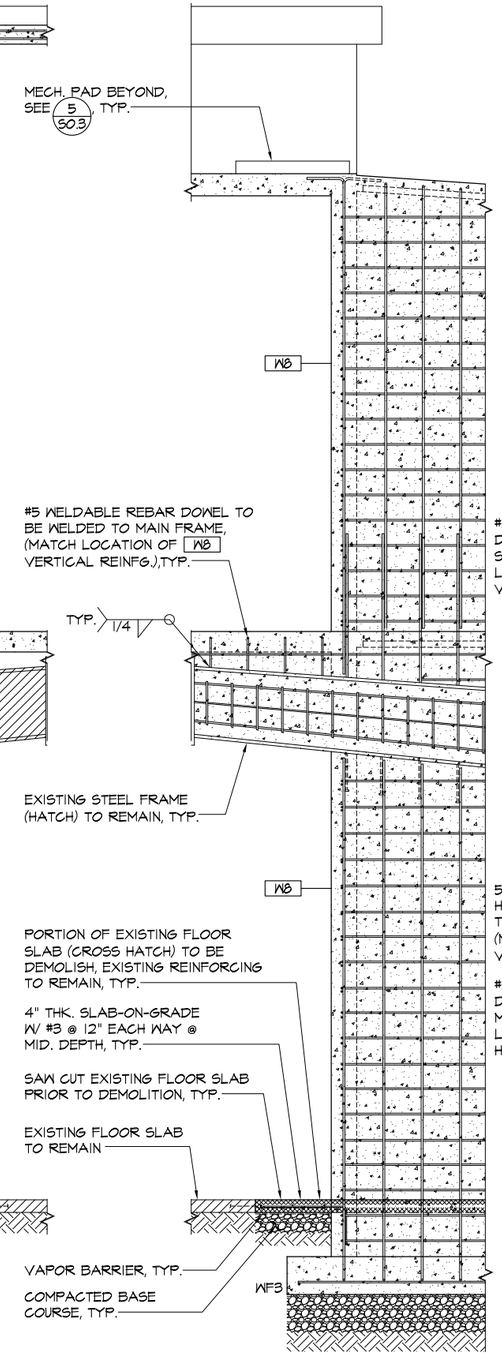

2 S2.4 SECTION
SCALE: 1/2"= 1'-0"

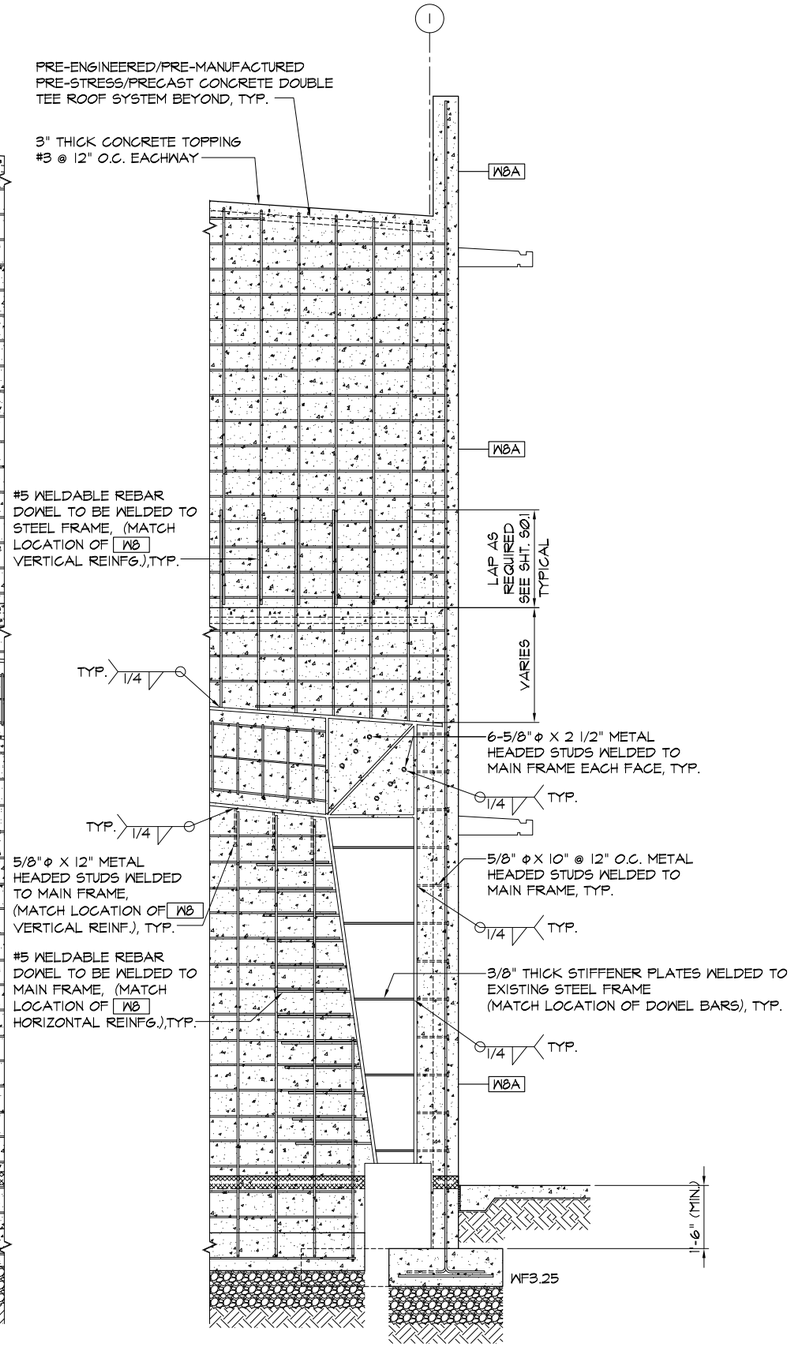

1 S2.4 SECTION
SCALE: 1/2"= 1'-0"

NOTE:

EXACT LOCATION, SIZE AND DEPTH OF EXISTING COLUMN FOOTING AND PEDESTAL SHALL BE FIELD VERIFIED. THE CONTRACTOR SHALL NOTIFY THE ENGINEER IF ACTUAL CONDITIONS DIFFER FROM WHAT IS SHOWN.

IF SHEET IS LESS THAN 24" X 36" REDUCED PRINT – USE GRAPHIC SCALES

REVISIONS		
No.	Description	Date

TRMA
Taniguchi Ruth Makio Architects
100 Cliff Business Center, P.O. Box EA, Agana, GU 96910
Tel.: (671) 475-8772 • Fax.: (671) 472-3381
Architecture
Planning
Interior Design

dueñas camacho & associates inc
■ ENGINEERING (CIVIL/STRUCTURAL)
■ CONSTRUCTION MANAGEMENT ■ PLANNING
■ ENVIRONMENTAL SERVICES ■ SURVEYING
■ DEVELOPMENT CONSULTATION
■ GEOGRAPHIC INFORMATION SYSTEMS
P.O. Box 8900 Tamuning, Guam 96931

BID DOCUMENTS

THOMAS P. CAMACHO CERTIFICATE NO. 752 STRUCTURAL EXP. 04-30-13 GUAM PROFESSIONAL ENGINEER

I HEREBY CERTIFY THAT THIS PLAN WAS PREPARED BY ME OR UNDER MY DIRECT SUPERVISION

DATE: _____

Project:
GCC
BLDG 200 RENOVATION

Title:
SECTIONS

Designed:	TPC
Drawn:	PCP
Checked:	TPC
Supv:	TPC
Scale:	AS SHOWN
Date:	
Project No. GG11-07	AutoCAD File GG1107-S2.4

Drawing No.
S2.4

Sheet No. _____ of _____

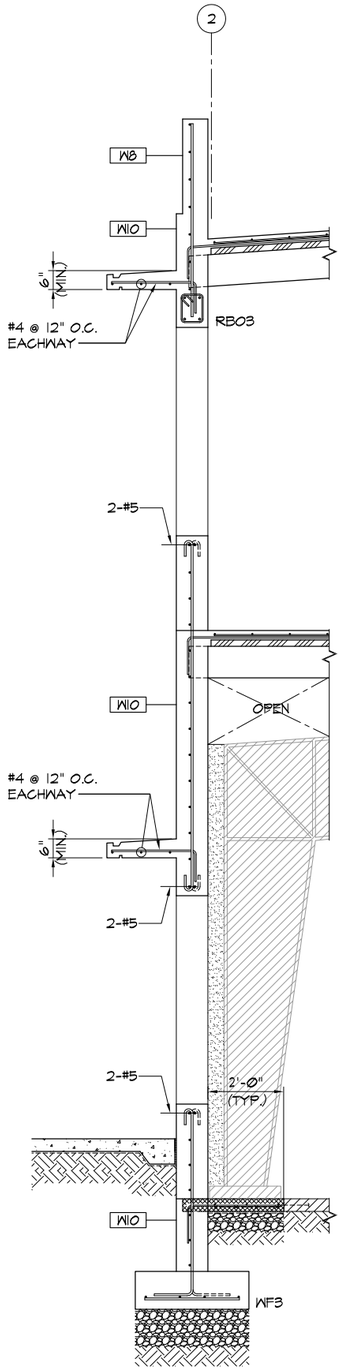

4 SECTION
S2.5 SCALE: 1/2"= 1'-0"

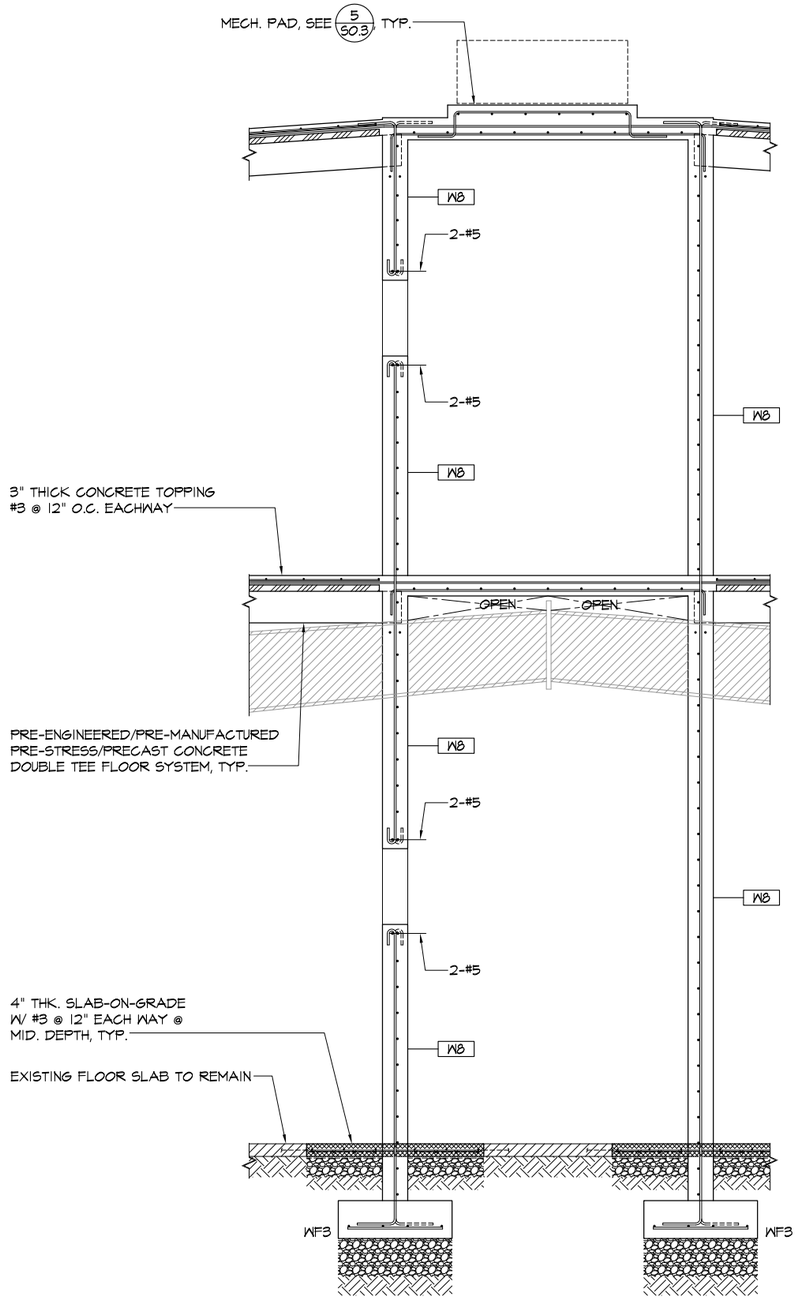

3 SECTION
S2.5 SCALE: 1/2"= 1'-0"

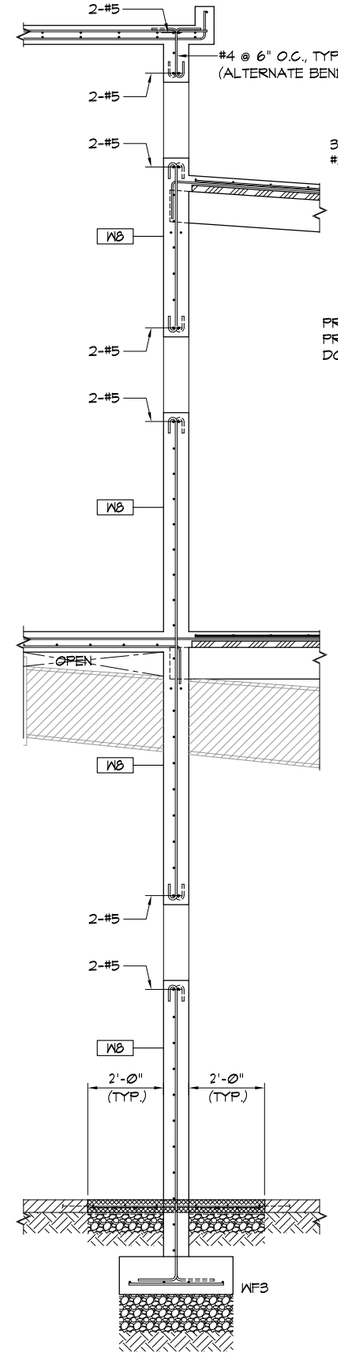

2 SECTION
S2.5 SCALE: 1/2"= 1'-0"

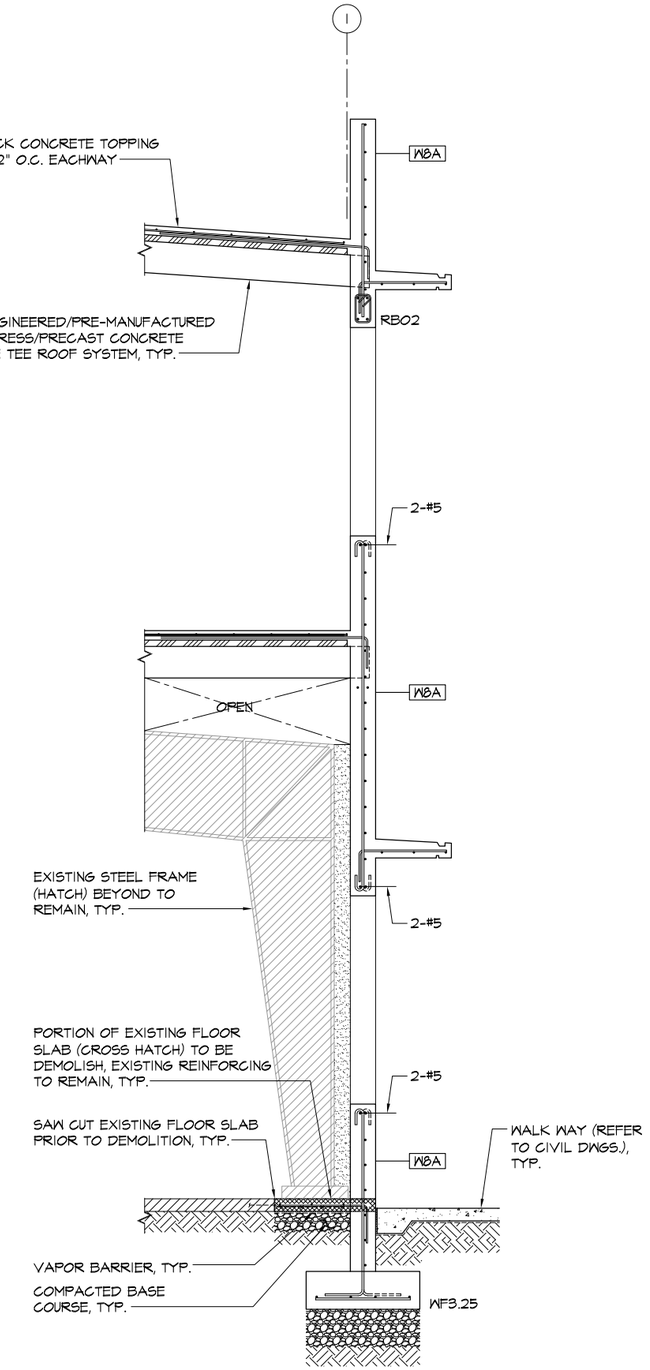

1 SECTION
S2.5 SCALE: 1/2"= 1'-0"

IF SHEET IS LESS THAN 24" X 36"
REDUCED PRINT – USE GRAPHIC SCALES

REVISIONS

No.	Description	Date

TRMA
Taniguchi Ruth Makio Architects
100 Cliff Business Center, P.O. Box EA, Agana, GU 96910
Tel.: (671) 475-8772 • Fax.: (671) 472-3381
Architecture
Planning
Interior Design

dueñas camacho & associates inc
■ ENGINEERING (CIVIL/STRUCTURAL)
■ CONSTRUCTION MANAGEMENT ■ PLANNING
■ ENVIRONMENTAL SERVICES ■ SURVEYING
■ DEVELOPMENT CONSULTATION
■ GEOGRAPHIC INFORMATION SYSTEMS
P.O. Box 8900 Tamuning, Guam 96931

BID DOCUMENTS

THOMAS P. CAMACHO
CERTIFICATE
NO. 752
STRUCTURAL
EXP. 04-30-13
GUAM
PROFESSIONAL ENGINEER

I HEREBY CERTIFY THAT THIS PLAN WAS PREPARED BY ME OR UNDER MY DIRECT SUPERVISION

DATE: _____

Project:
GCC
BLDG 200 RENOVATION

Title:
SECTIONS

Designed:	TPC
Drawn:	PCP
Checked:	TPC
Supv:	TPC
Scale:	AS SHOWN
Date:	
Project No. GG11-07	AutoCAD File GG1107-S2.5

Drawing No.
S2.5

Sheet No. _____ of _____

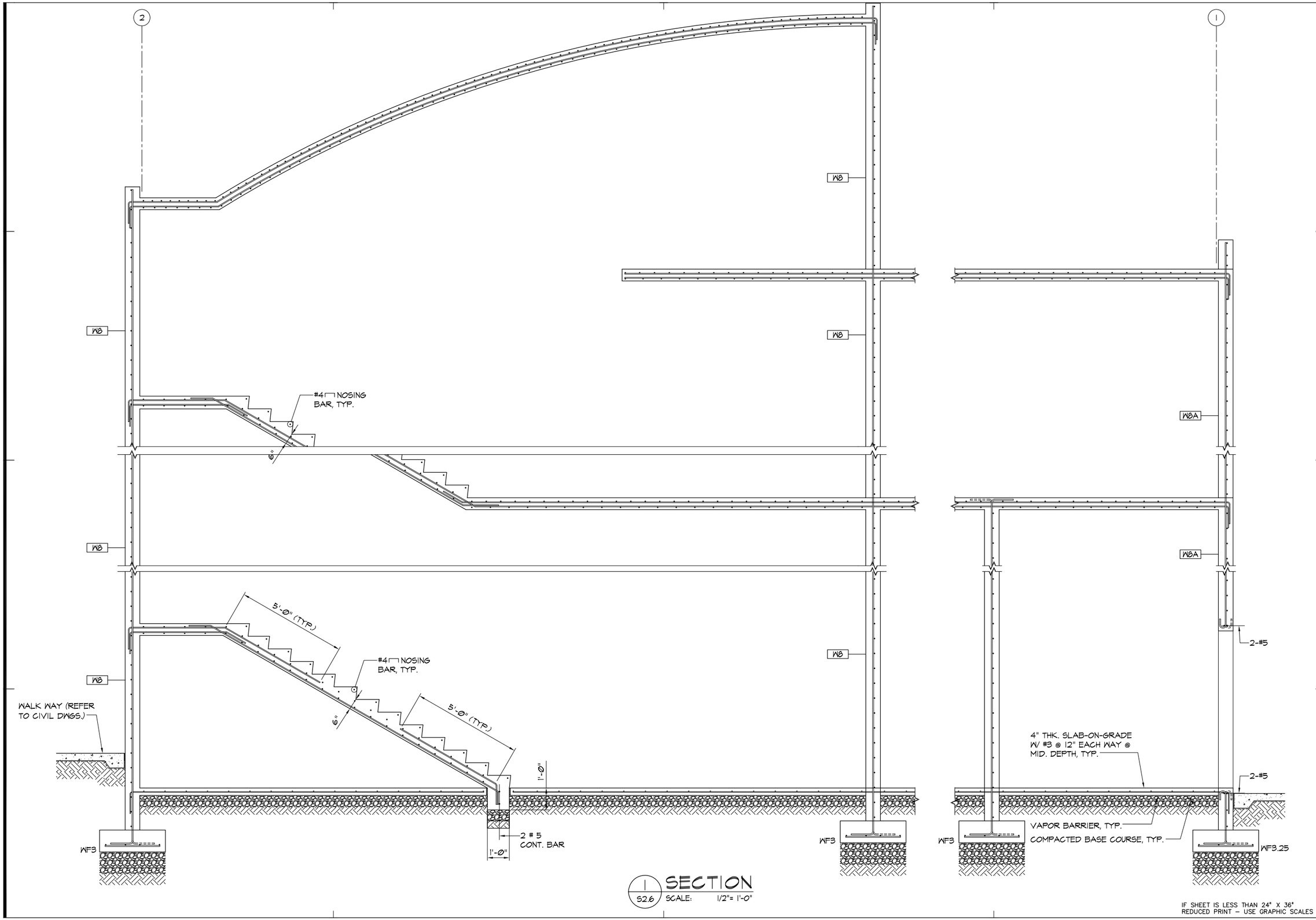

1 / S2.6 SECTION
SCALE: 1/2"= 1'-0"

IF SHEET IS LESS THAN 24" X 36" REDUCED PRINT – USE GRAPHIC SCALES

REVISIONS		
No.	Description	Date

TRMA
Taniguchi Ruth Makio Architects
100 Cliff Business Center, P.O. Box EA, Agana, GU 96910
Tel.: (671) 475-8772 • Fax.: (671) 472-3381
Architecture
Planning
Interior Design

dueñas camacho & associates inc
■ ENGINEERING (CIVIL/STRUCTURAL)
■ CONSTRUCTION MANAGEMENT ■ PLANNING
■ ENVIRONMENTAL SERVICES ■ SURVEYING
■ DEVELOPMENT CONSULTATION
■ GEOGRAPHIC INFORMATION SYSTEMS
P.O. Box 8900 Tamuning, Guam 96931

BID DOCUMENTS

THOMAS P. CAMACHO CERTIFICATE NO. 752 STRUCTURAL EXP. 04-30-12 GUAM PROFESSIONAL ENGINEER

I HEREBY CERTIFY THAT THIS PLAN WAS PREPARED BY ME OR UNDER MY DIRECT SUPERVISION

DATE: _____

Project:
GCC
BLDG 200 RENOVATION

Title:
SECTIONS

Designed:	TPC
Drawn:	PCP
Checked:	TPC
Supv:	TPC
Scale:	AS SHOWN
Date:	
Project No. GG11-07	AutoCAD File GG1107-S2.6

Drawing No.
S2.6

Sheet No. _____ of _____

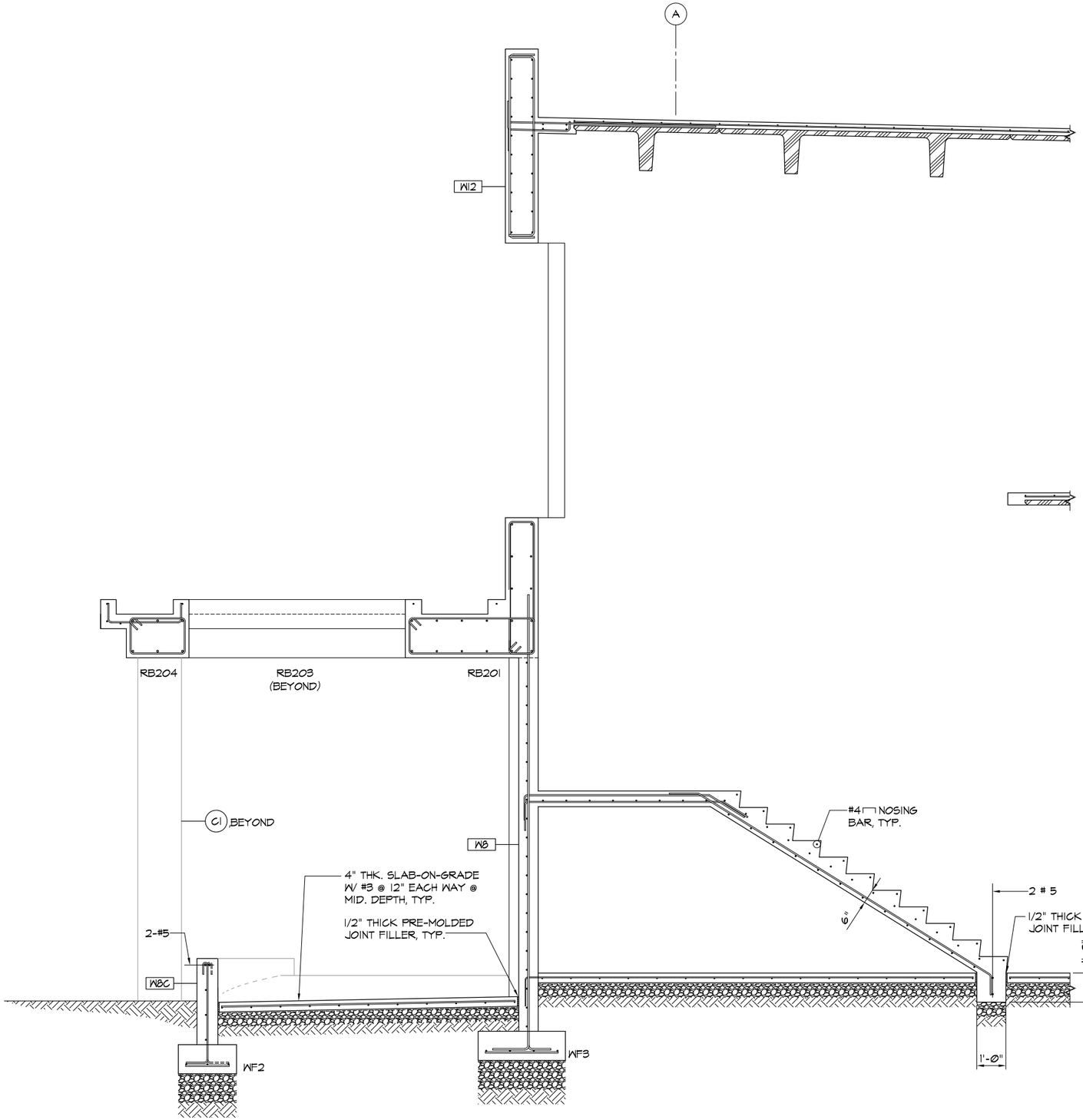

2 SECTION
S2.7 SCALE: 1/2"= 1'-0"

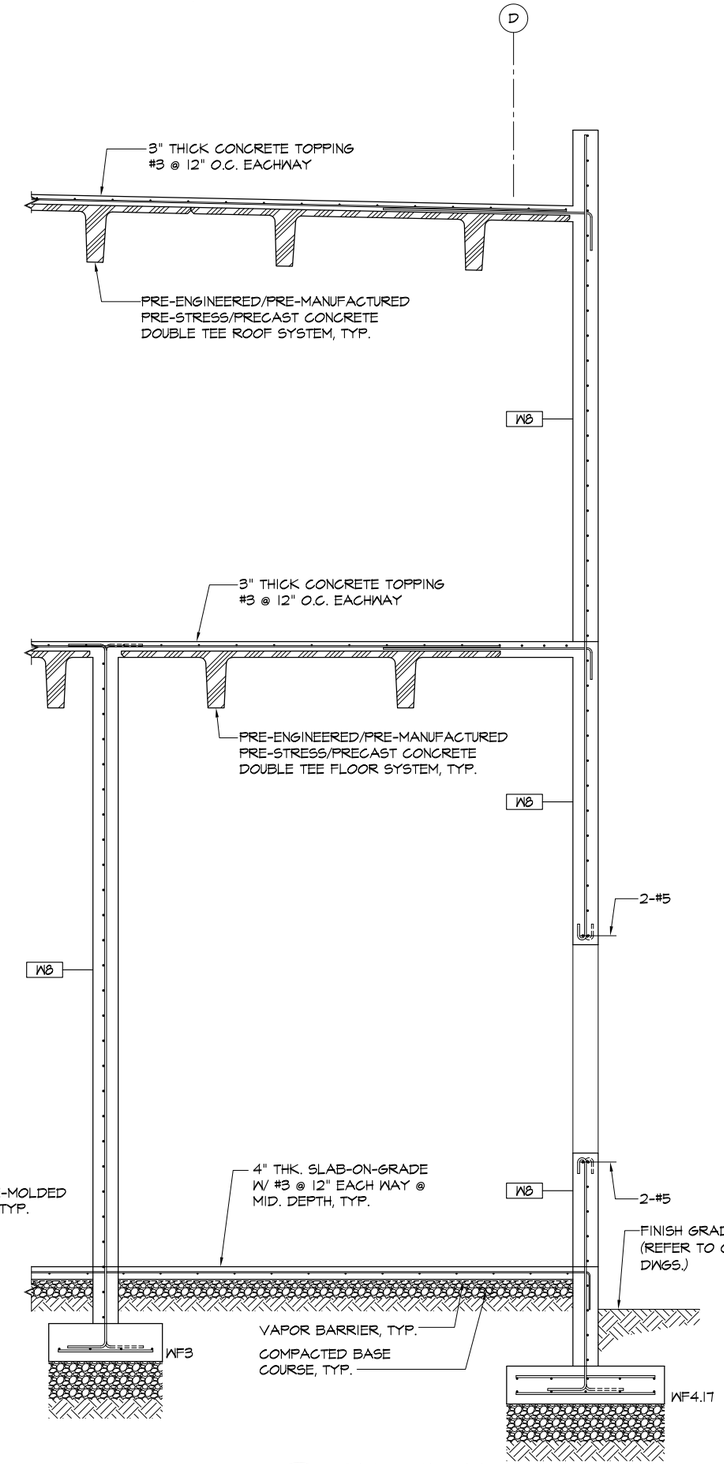

1 SECTION
S2.7 SCALE: 1/2"= 1'-0"

IF SHEET IS LESS THAN 24" X 36"
REDUCED PRINT – USE GRAPHIC SCALES

REVISIONS		
No.	Description	Date

TRMA
Taniguchi Ruth Makio Architects
100 Cliff Business Center, P.O. Box EA, Agana, GU 96910
Tel.: (671) 475-8772 • Fax.: (671) 472-3381
Architecture
Planning
Interior Design

dueñas camacho & associates inc
■ ENGINEERING (CIVIL/STRUCTURAL)
■ CONSTRUCTION MANAGEMENT ■ PLANNING
■ ENVIRONMENTAL SERVICES ■ SURVEYING
■ DEVELOPMENT CONSULTATION
■ GEOGRAPHIC INFORMATION SYSTEMS
P.O. Box 8950 Tamuning, Guam 96931

BID
DOCUMENTS

THOMAS P. CAMACHO
CERTIFICATE
NO. 752
STRUCTURAL
EXP. 04-30-15
GUAM
PROFESSIONAL ENGINEER

I HEREBY CERTIFY THAT THIS PLAN WAS PREPARED BY ME OR UNDER MY DIRECT SUPERVISION

DATE: _____

Project:
GCC
BLDG 200 RENOVATION

Title:
SECTIONS

Designed:	TPC
Drawn:	PCP
Checked:	TPC
Supv:	TPC
Scale:	AS SHOWN
Date:	
Project No. GG11-07	AutoCAD File GG1107-S2.7

Drawing No.
S2.7

Sheet No. _____ of _____

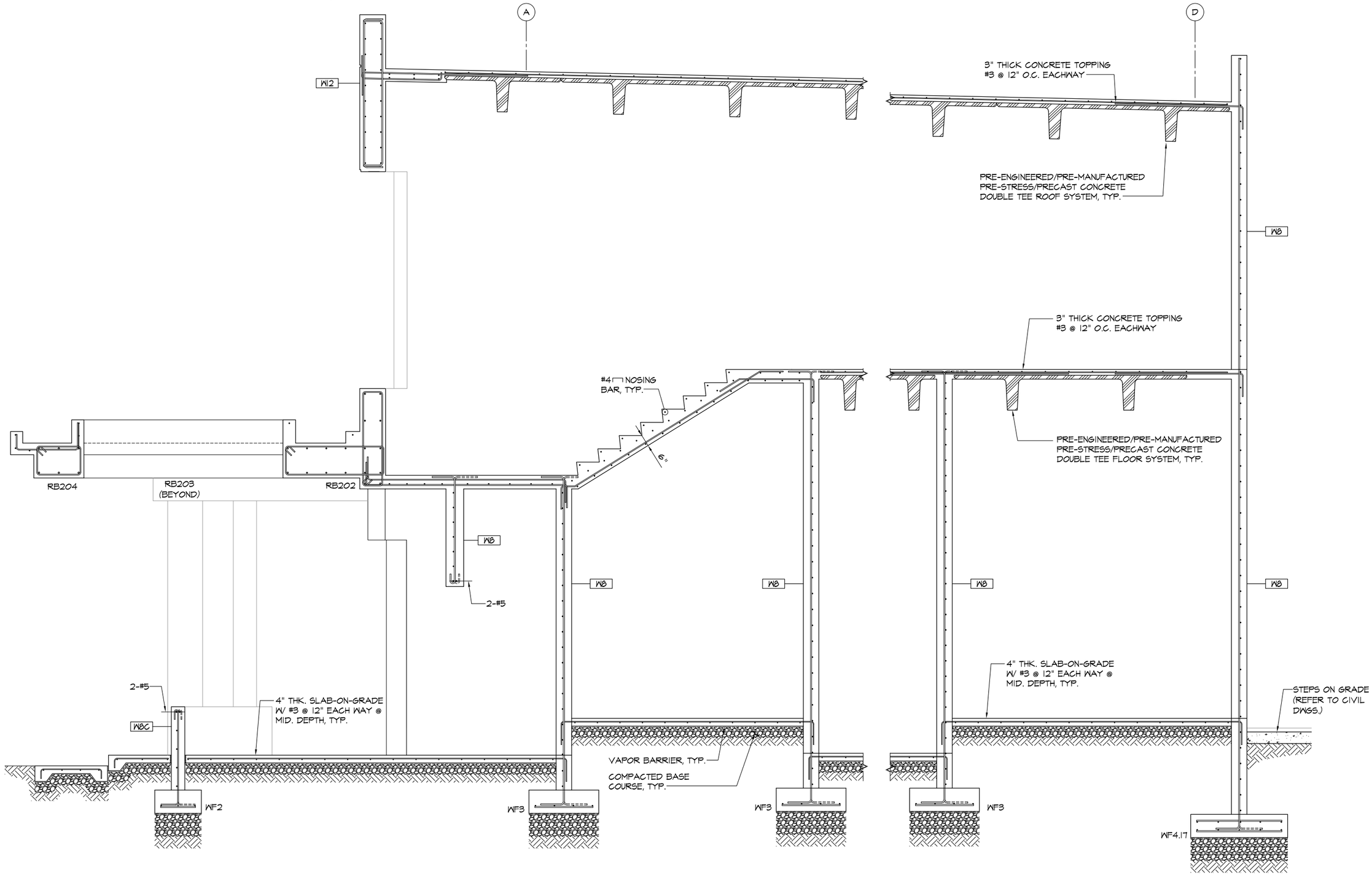

2 S2.8 SECTION
SCALE: 1/2"= 1'-0"

1 S2.8 SECTION
SCALE: 1/2"= 1'-0"

IF SHEET IS LESS THAN 24" X 36"
REDUCED PRINT – USE GRAPHIC SCALES

REVISIONS		
No.	Description	Date

TRMA
Taniguchi Ruth Makio Architects
100 Cliff Business Center, P.O. Box EA, Agana, GU 96910
Tel.: (671) 475-8772 • Fax.: (671) 472-3381
Architecture
Planning
Interior Design

dueñas camacho & associates inc
■ ENGINEERING (CIVIL/STRUCTURAL)
■ CONSTRUCTION MANAGEMENT ■ PLANNING
■ ENVIRONMENTAL SERVICES ■ SURVEYING
■ DEVELOPMENT CONSULTATION
■ GEOGRAPHIC INFORMATION SYSTEMS
P.O. Box 8950 Tamuning, Guam 96931

BID
DOCUMENTS

THOMAS P. CANTACIO
CERTIFICATE
NO. 752
STRUCTURAL
EXP. 04-30-13
GUAM
PROFESSIONAL ENGINEER

I HEREBY CERTIFY THAT THIS PLAN WAS PREPARED BY ME OR UNDER MY DIRECT SUPERVISION

DATE: _____

Project:

GCC

BLDG 200 RENOVATION

Title:

SECTIONS

Designed:	TPC
Drawn:	PCP
Checked:	TPC
Supv:	TPC
Scale:	AS SHOWN
Date:	
Project No. 6611-07	AutoCAD File 661107-S2.8

Drawing No.

S2.8

Sheet No. _____ of _____

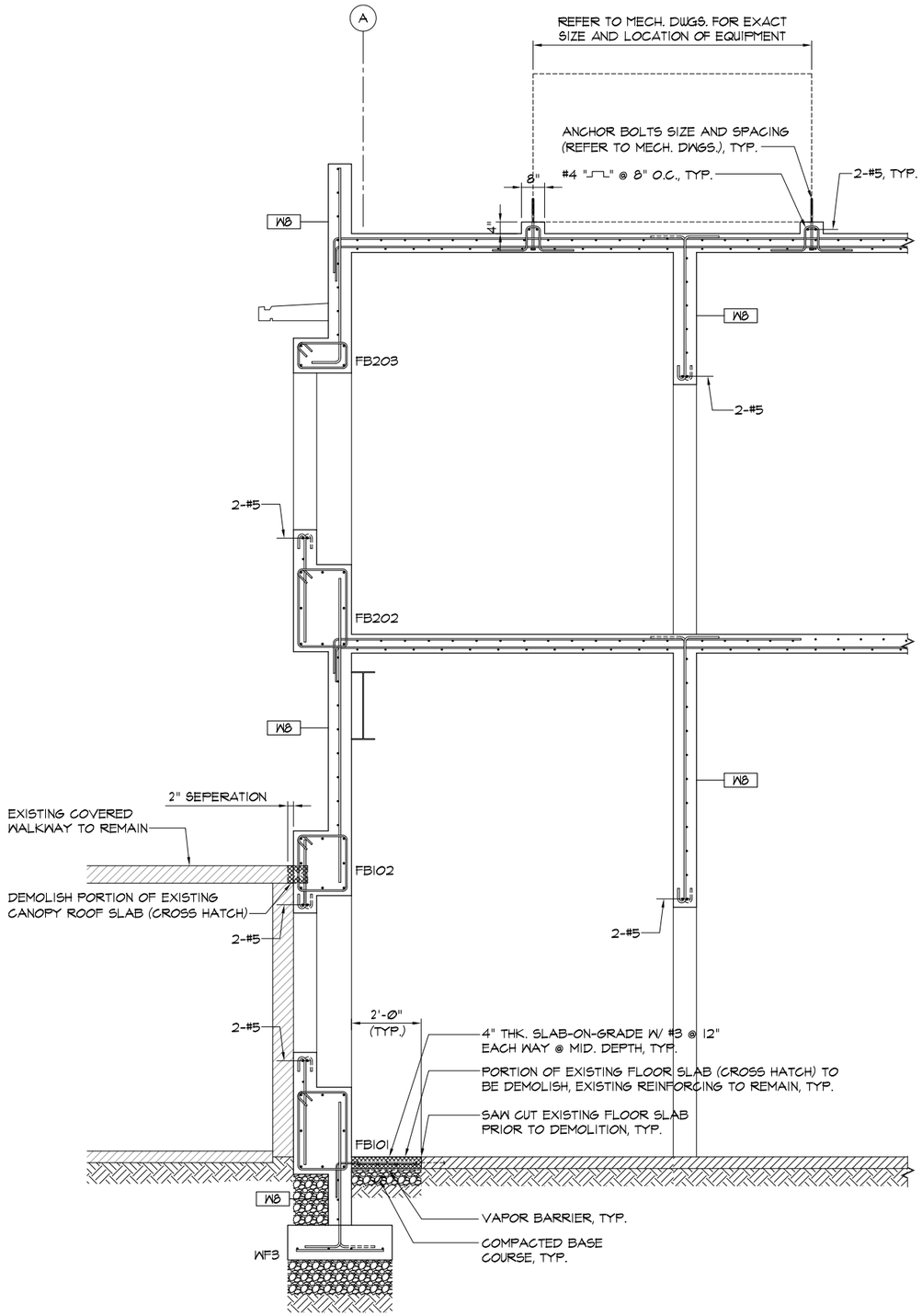

2 / S2.9 SECTION
SCALE: 1/2"= 1'-0"

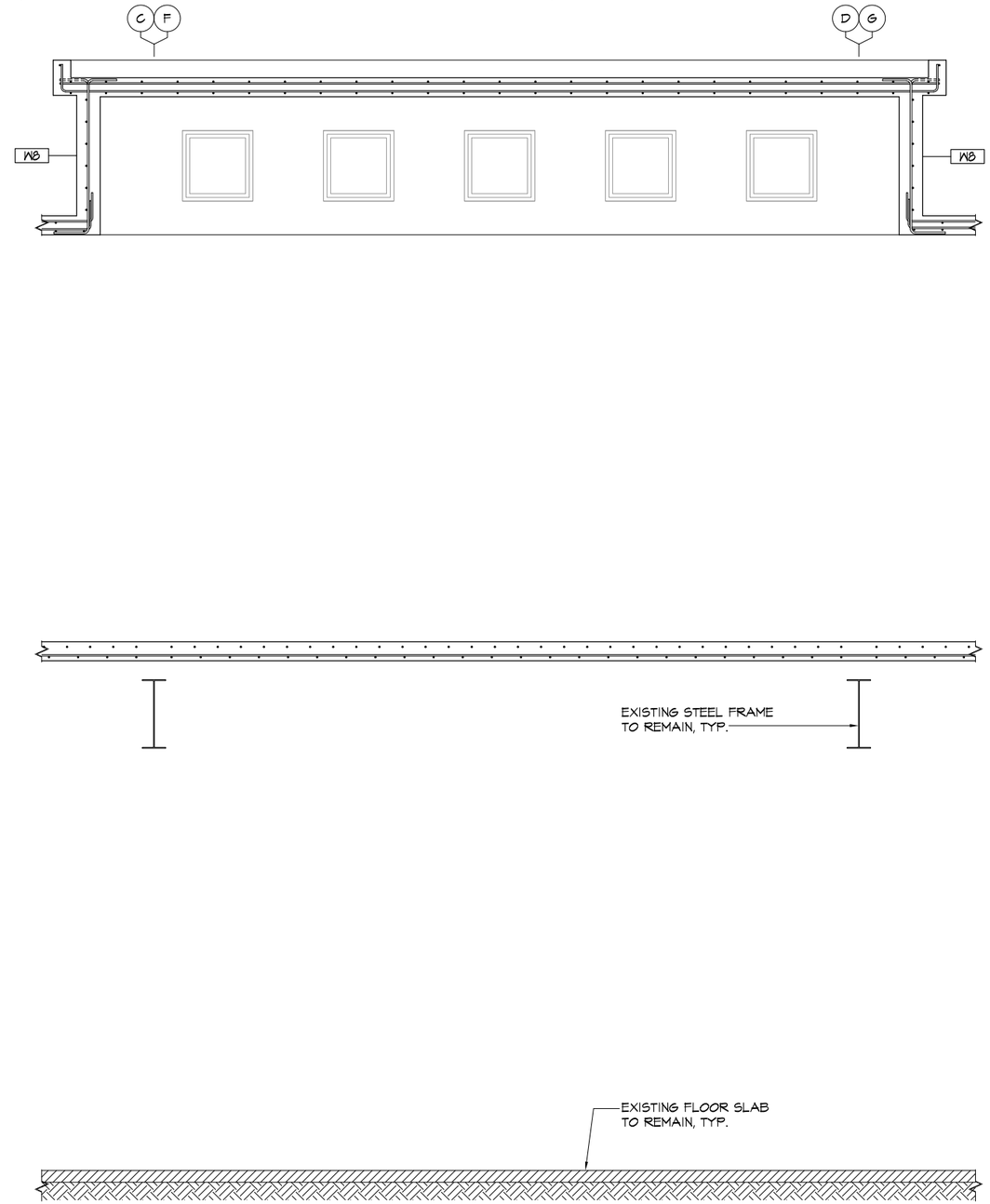

1 / S2.9 SECTION
SCALE: 1/2"= 1'-0"

IF SHEET IS LESS THAN 24" X 36"
REDUCED PRINT – USE GRAPHIC SCALES

REVISIONS		
No.	Description	Date

TRMA
Taniguchi Ruth Makio Architects
100 Cliff Business Center, P.O. Box EA, Agana, GU 96910
Tel.: (671) 475-8772 • Fax.: (671) 472-3381
Architecture
Planning
Interior Design

dueñas camacho & associates inc
■ ENGINEERING (CIVIL/STRUCTURAL)
■ CONSTRUCTION MANAGEMENT ■ PLANNING
■ ENVIRONMENTAL SERVICES ■ SURVEYING
■ DEVELOPMENT CONSULTATION
■ GEOGRAPHIC INFORMATION SYSTEMS
P.O. Box 8950 Tamuning, Guam 96931

BID DOCUMENTS

THOMAS P. CAMACHO
CERTIFICATE
NO. 752
STRUCTURAL
EXP. 04-30-13
GUAM
PROFESSIONAL ENGINEER

I HEREBY CERTIFY THAT THIS PLAN WAS PREPARED BY ME OR UNDER MY DIRECT SUPERVISION

DATE: _____

Project:
GCC
BLDG 200 RENOVATION

Title:
SECTIONS

Designed:	TPC
Drawn:	PCP
Checked:	TPC
Supv:	TPC
Scale:	AS SHOWN
Date:	
Project No. GG11-07	AutoCAD File GG1107-S2.9

Drawing No.
S2.9

Sheet No. _____ of _____

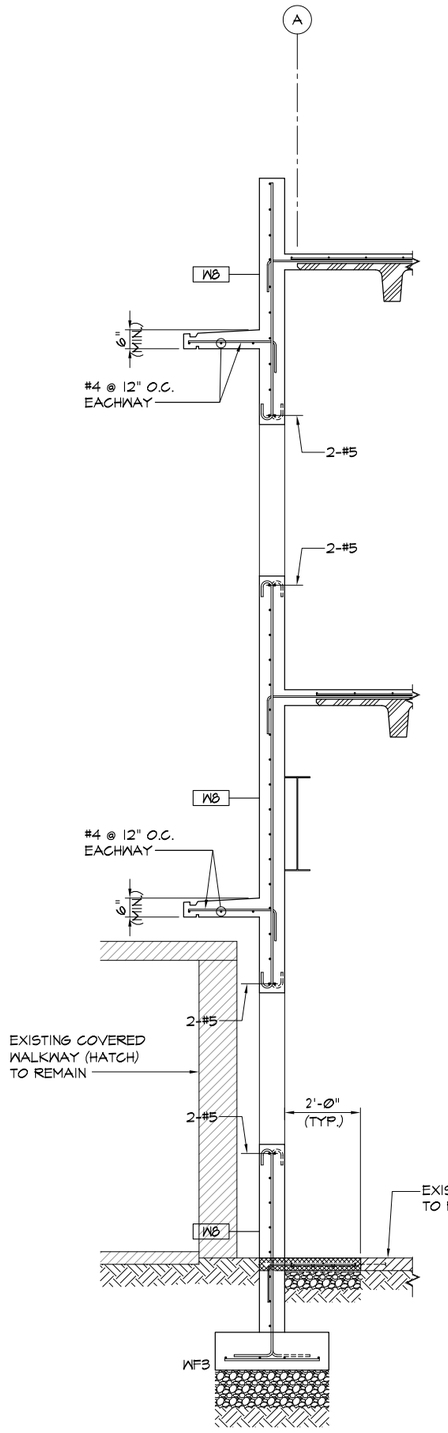

4 SECTION
S2.10 SCALE: 1/2"= 1'-0"

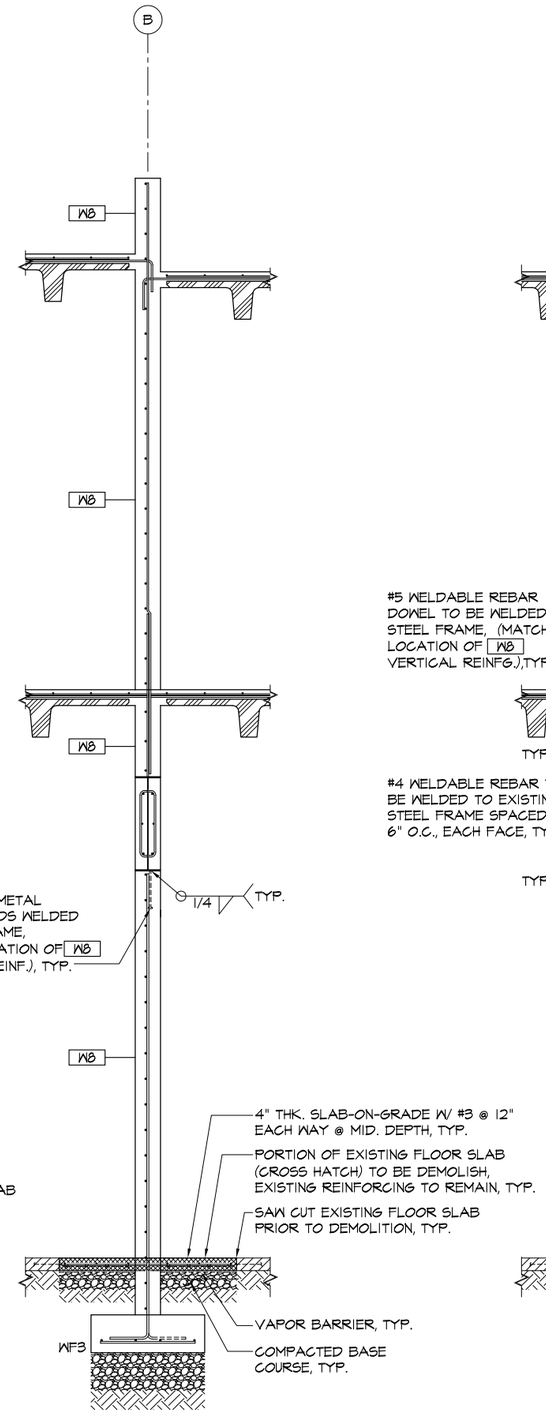

3 SECTION
S2.10 SCALE: 1/2"= 1'-0"

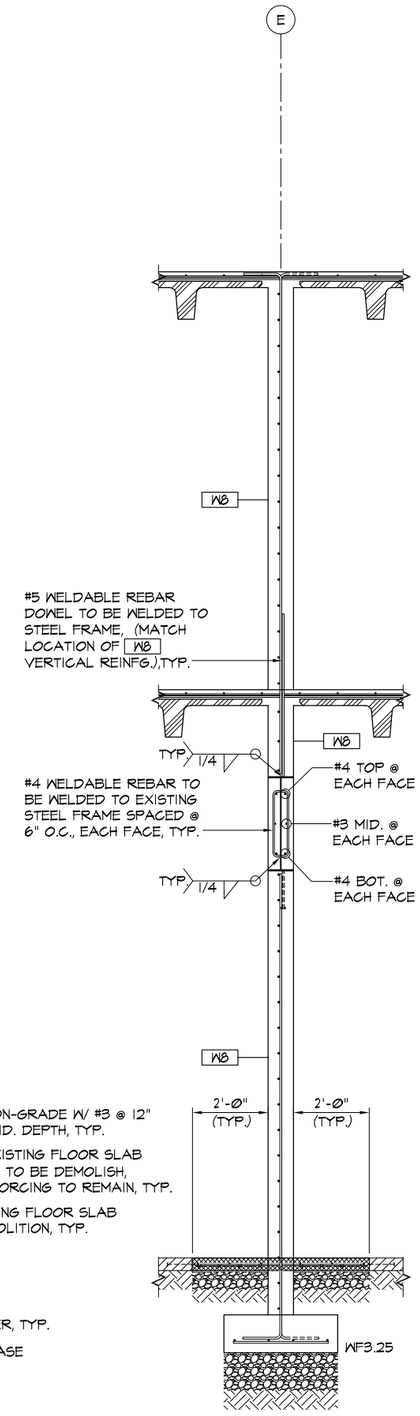

2 SECTION
S2.10 SCALE: 1/2"= 1'-0"

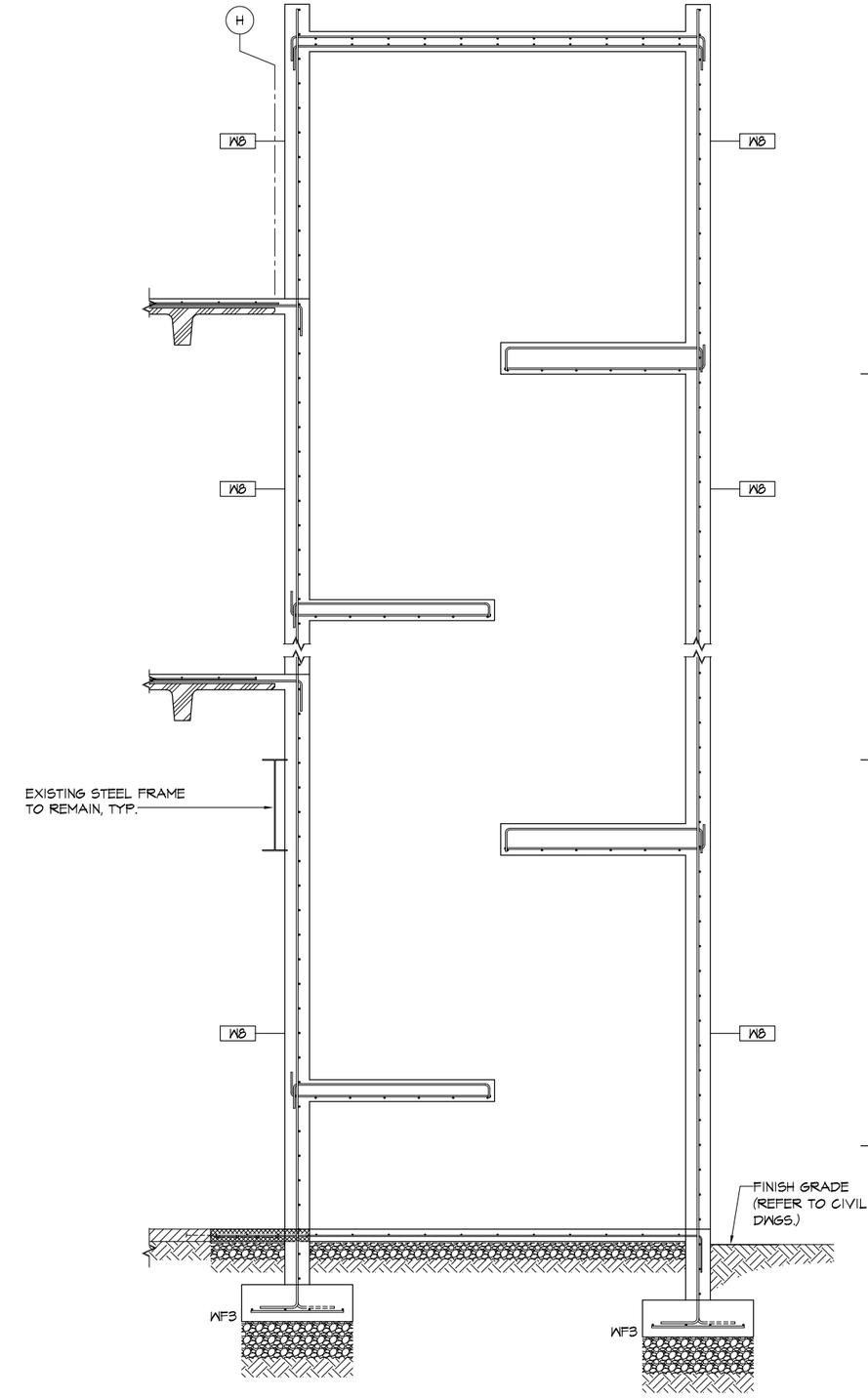

1 SECTION
S2.10 SCALE: 1/2"= 1'-0"

IF SHEET IS LESS THAN 24" X 36"
REDUCED PRINT – USE GRAPHIC SCALES

REVISIONS

No.	Description	Date

TRMA
Taniguchi Ruth Makio Architects
100 Cliff Business Center, P.O. Box EA, Agana, GU 96910
Tel.: (671) 475-8772 • Fax.: (671) 472-3381
Architecture
Planning
Interior Design

dueñas camacho & associates inc
■ ENGINEERING (CIVIL/STRUCTURAL)
■ CONSTRUCTION MANAGEMENT ■ PLANNING
■ ENVIRONMENTAL SERVICES ■ SURVEYING
■ DEVELOPMENT CONSULTATION
■ GEOGRAPHIC INFORMATION SYSTEMS
P.O. Box 8950 Tamuning, Guam 96931

BID
DOCUMENTS

THOMAS P. CAMACHO
CERTIFICATE
NO. 752
STRUCTURAL
EXP. 04-30-15
GUAM
PROFESSIONAL ENGINEER

I HEREBY CERTIFY THAT THIS PLAN WAS PREPARED BY ME OR UNDER MY DIRECT SUPERVISION

DATE: _____

Project:
GCC
BLDG 200 RENOVATION

Title:
SECTIONS

Designed:	TPC
Drawn:	PCP
Checked:	TPC
Supv:	TPC
Scale:	AS SHOWN
Date:	
Project No. GG11-07	AutoCAD File GG1107-S2.10

Drawing No.
S2.10

Sheet No. _____ of _____

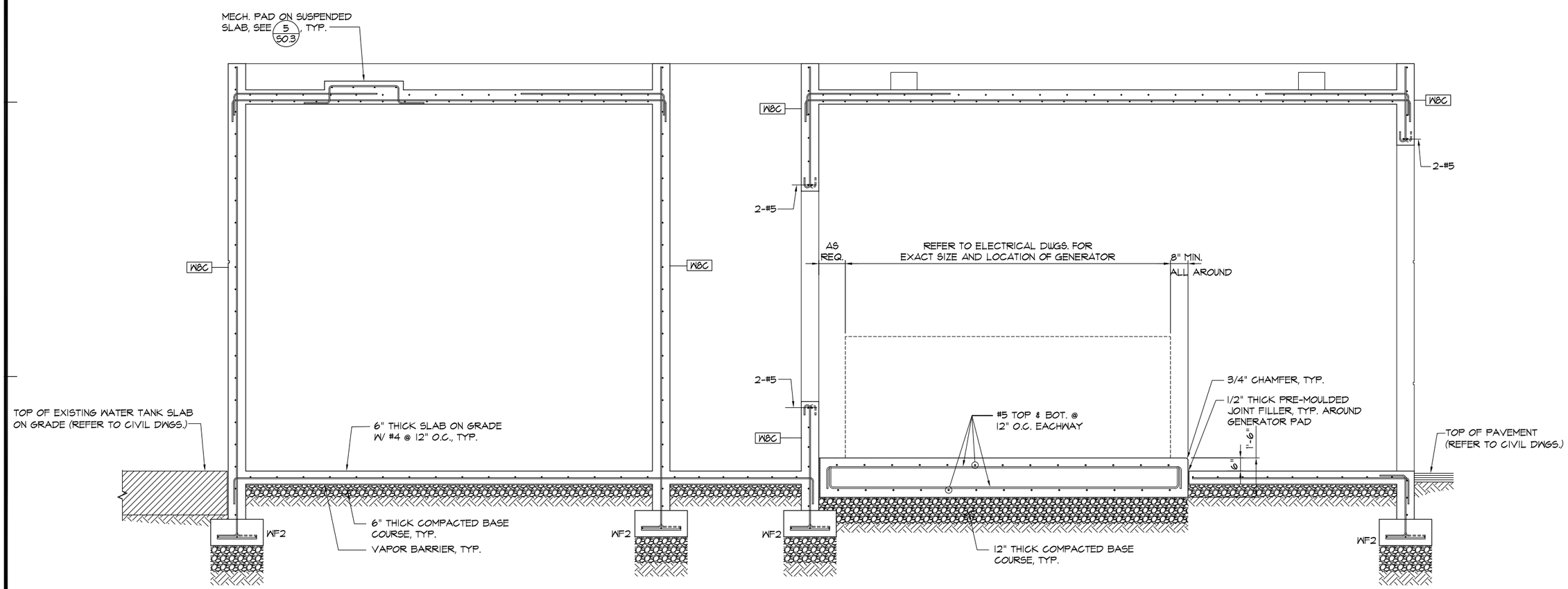

1 / S2.11 SECTION
SCALE: 1/2"= 1'-0"

IF SHEET IS LESS THAN 24" X 36" REDUCED PRINT – USE GRAPHIC SCALES

REVISIONS		
No.	Description	Date

TRMA
Taniguchi Ruth Makio Architects
100 Cliff Business Center, P.O. Box EA, Agana, GU 96910
Tel.: (671) 475-8772 • Fax.: (671) 472-3381

Architecture
Planning
Interior Design

dueñas camacho & associates inc
■ ENGINEERING (CIVIL/STRUCTURAL)
■ CONSTRUCTION MANAGEMENT ■ PLANNING
■ ENVIRONMENTAL SERVICES ■ SURVEYING
■ DEVELOPMENT CONSULTATION
■ GEOGRAPHIC INFORMATION SYSTEMS
P.O. Box 8950 Tamuning, Guam 96931

BID DOCUMENTS

THOMAS P. CANACHO
CERTIFICATE
NO. 752
STRUCTURAL
EXP. 04-30-13
GUAM
PROFESSIONAL ENGINEER

I HEREBY CERTIFY THAT THIS PLAN WAS PREPARED BY ME OR UNDER MY DIRECT SUPERVISION

DATE: _____

Project:
GCC
BLDG 200 RENOVATION

Title:
SECTION

Designed:	TPC
Drawn:	PCP/TPCJ
Checked:	TPC
Supv:	TPC
Scale:	AS SHOWN
Date:	
Project No. 6611-07	AutoCAD File 661107-S2.13

Drawing No.
S2.11

Sheet No. _____ of _____

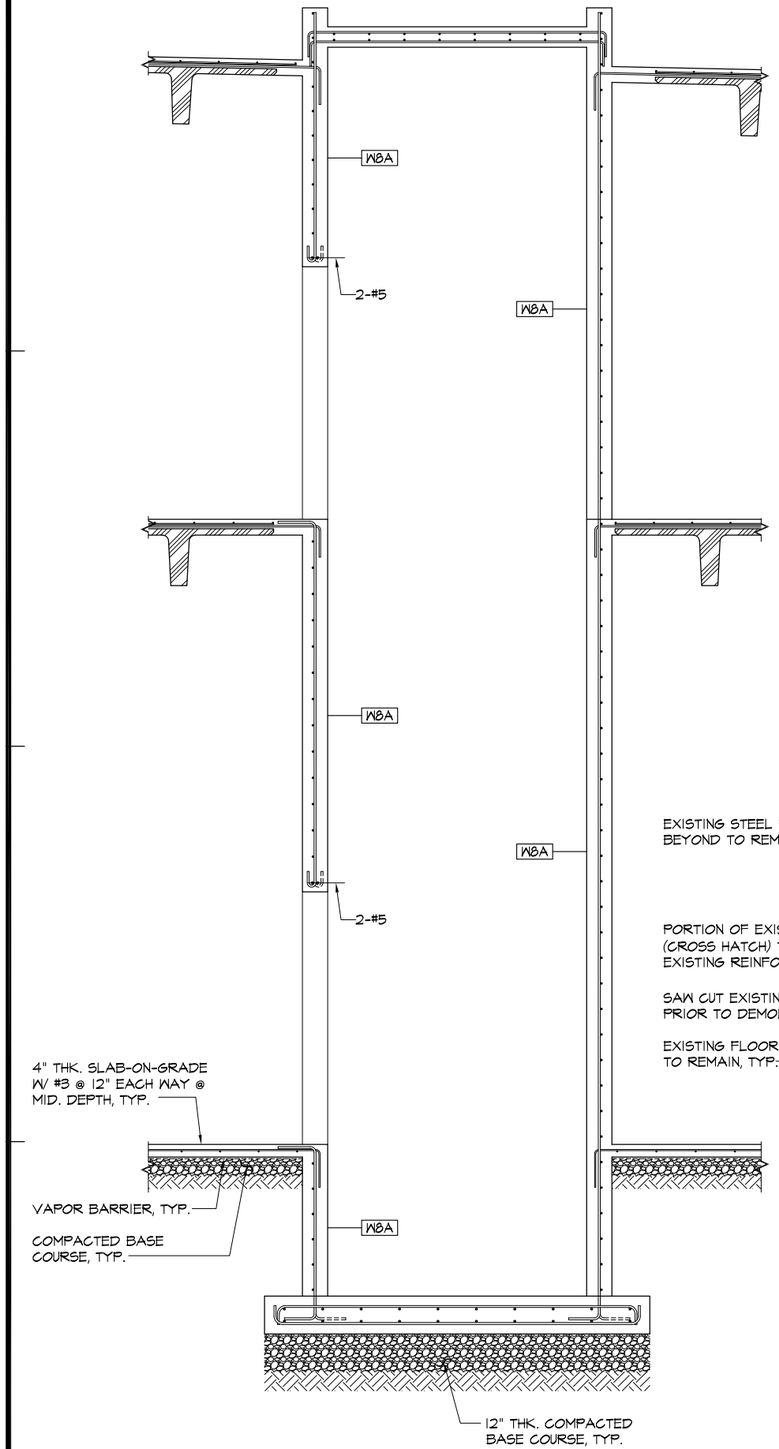

3 S3.1 SECTION
SCALE: 1/2"= 1'-0"

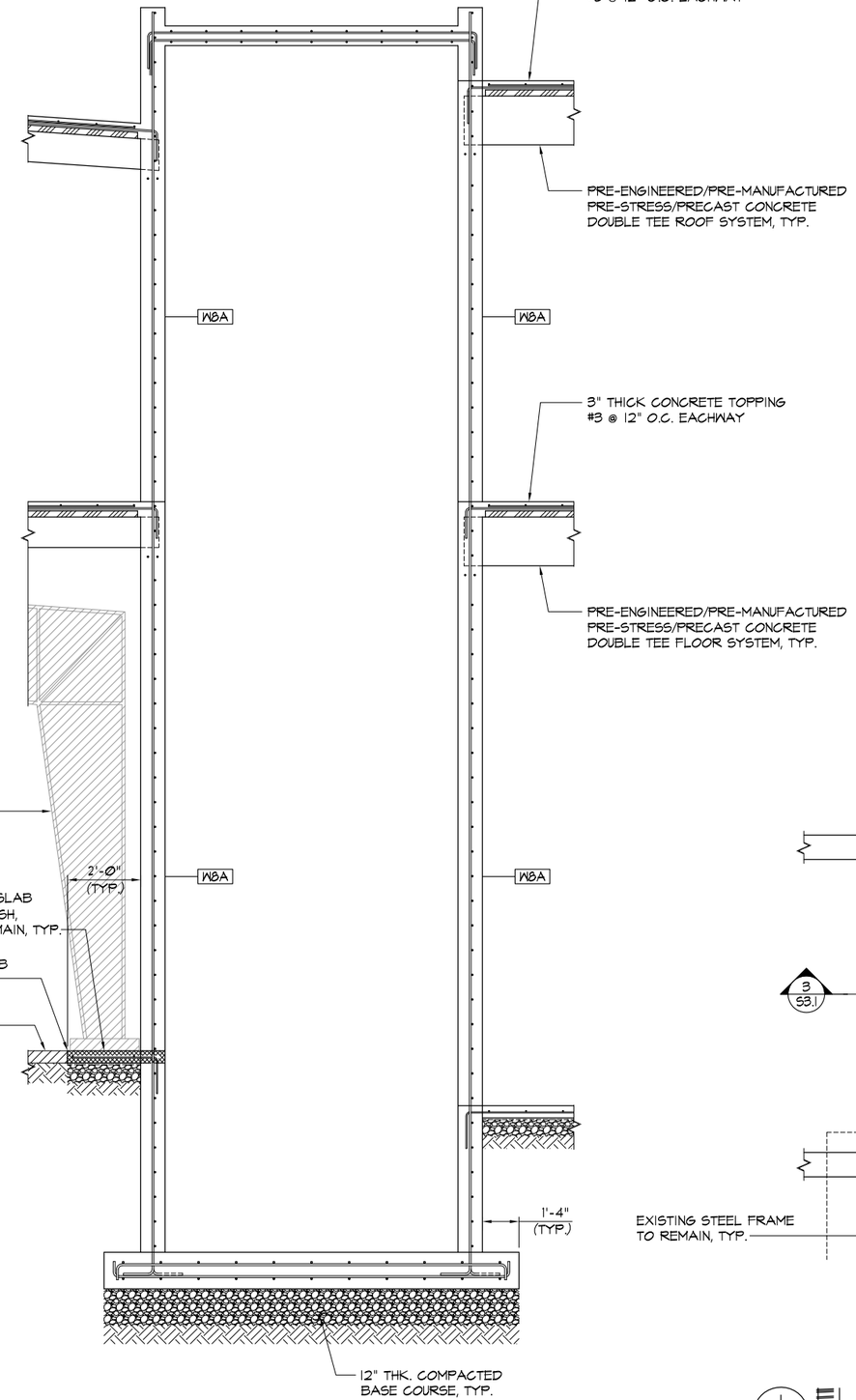

2 S3.1 SECTION
SCALE: 1/2"= 1'-0"

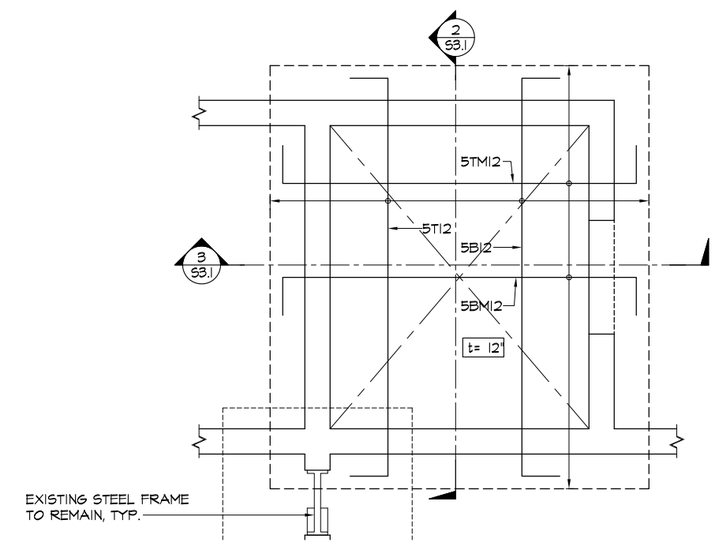

1 S3.1 ELEVATOR FOUNATION PLAN
SCALE: 1/2"= 1'-0"

IF SHEET IS LESS THAN 24" X 36"
REDUCED PRINT – USE GRAPHIC SCALES

REVISIONS

No.	Description	Date

TRMA
Taniguchi Ruth Makio Architects
100 Cliff Business Center, P.O. Box EA, Agana, GU 96910
Tel.: (671) 475-8772 • Fax.: (671) 472-3381
Architecture
Planning
Interior Design

dueñas camacho & associates inc
■ ENGINEERING (CIVIL/STRUCTURAL)
■ CONSTRUCTION MANAGEMENT ■ PLANNING
■ ENVIRONMENTAL SERVICES ■ SURVEYING
■ DEVELOPMENT CONSULTATION
■ GEOGRAPHIC INFORMATION SYSTEMS
P.O. Box 8950 Tamuning, Guam 96931

BID DOCUMENTS

THOMAS P. CAMACHO
CERTIFICATE
NO. 752
STRUCTURAL
EXP. 04-30-13
GUAM
PROFESSIONAL ENGINEER

I HEREBY CERTIFY THAT THIS PLAN WAS PREPARED BY ME OR UNDER MY DIRECT SUPERVISION

DATE: _____

Project:
GCC
BLDG 200 RENOVATION

Title:
ELEVATOR FOUNDATION PLAN AND SECTIONS

Designed:	TPC
Drawn:	PCP
Checked:	TPC
Supv:	TPC
Scale:	AS SHOWN
Date:	
Project No. 6611-07	AutoCAD File 661107-S3.1

Drawing No.
S3.1

Sheet No. _____ of _____

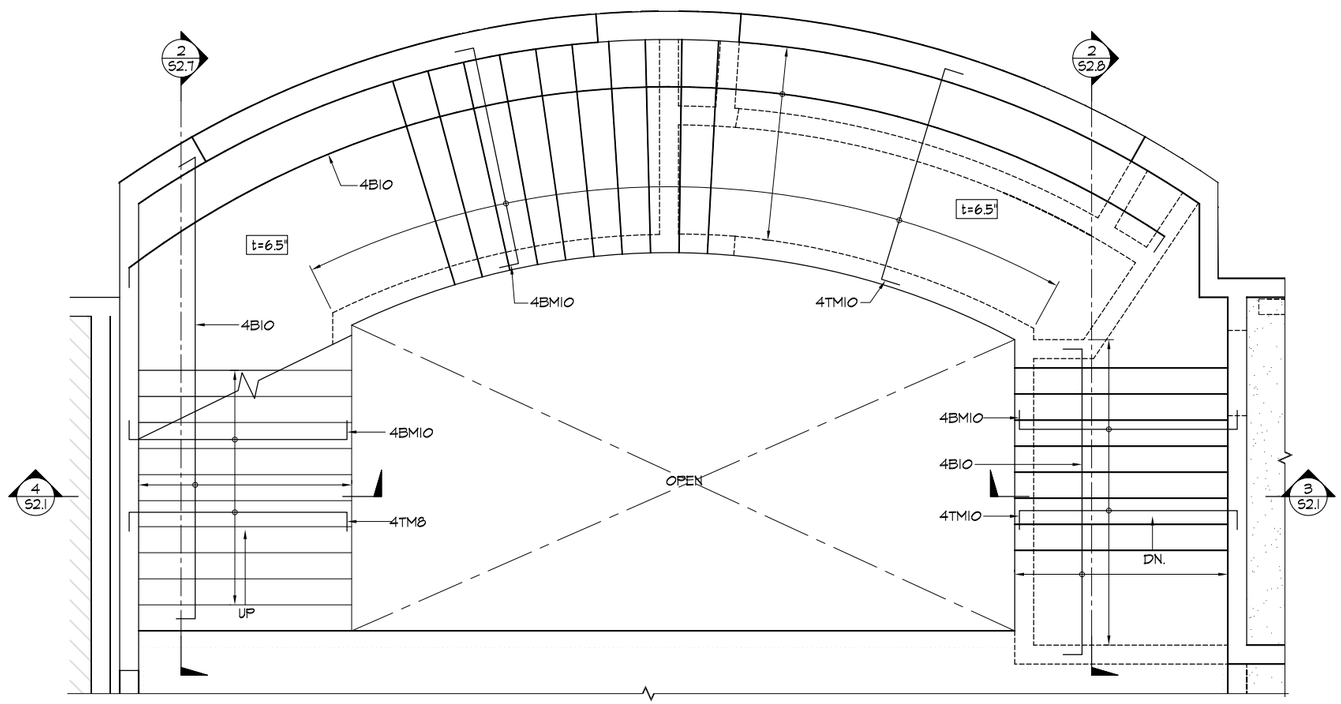

1 / S3.2 1ST TO 2ND LEVEL FRAMING PLAN

SCALE: 3/8"= 1'-0"

IF SHEET IS LESS THAN 24" X 36"
REDUCED PRINT – USE GRAPHIC SCALES

REVISIONS		
No.	Description	Date

TRMA
Taniguchi Ruth Makio Architects
100 Cliff Business Center, P.O. Box EA, Agana, GU 96910
Tel.: (671) 475-8772 • Fax.: (671) 472-3381

Architecture
Planning
Interior Design

dueñas camacho & associates inc
■ ENGINEERING (CIVIL/STRUCTURAL)
■ CONSTRUCTION MANAGEMENT ■ PLANNING
■ ENVIRONMENTAL SERVICES ■ SURVEYING
■ DEVELOPMENT CONSULTATION
■ GEOGRAPHIC INFORMATION SYSTEMS
P.O. Box 8950 Tamuning, Guam 96931

BID DOCUMENTS

THOMAS P. CAMACHO
CERTIFICATE
NO. 752
STRUCTURAL
EXP. 04-30-13
GUAM
PROFESSIONAL ENGINEER

I HEREBY CERTIFY THAT THIS PLAN WAS PREPARED BY ME OR UNDER MY DIRECT SUPERVISION

DATE: _____

Project:

GCC

BLDG 200 RENOVATION

Title:

STAIR #1 FRAMING PLAN

Designed:	TPC
Drawn:	PCP
Checked:	TPC
Supv:	TPC
Scale:	AS SHOWN
Date:	
Project No. 6611-07	AutoCAD File 661107-S3.2

Drawing No.

S3.2

Sheet No. _____ of _____

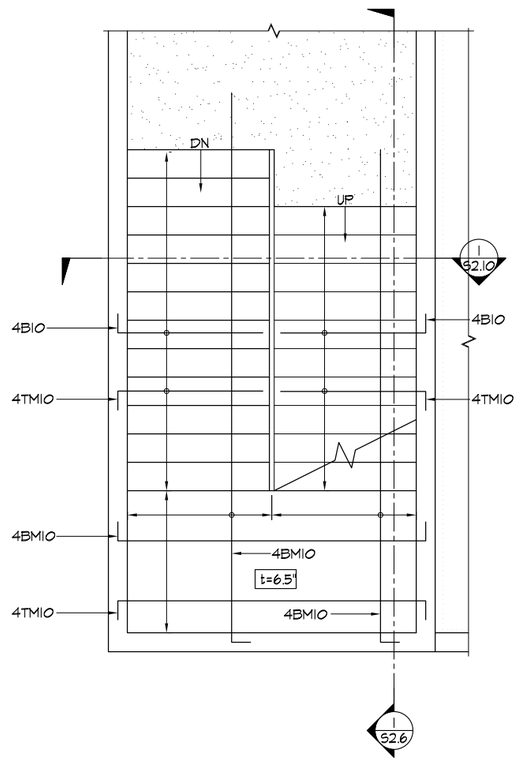

3 / S3.3 2ND TO ROOF LEVEL FRAMING PLAN
SCALE: 3/8"= 1'-0"

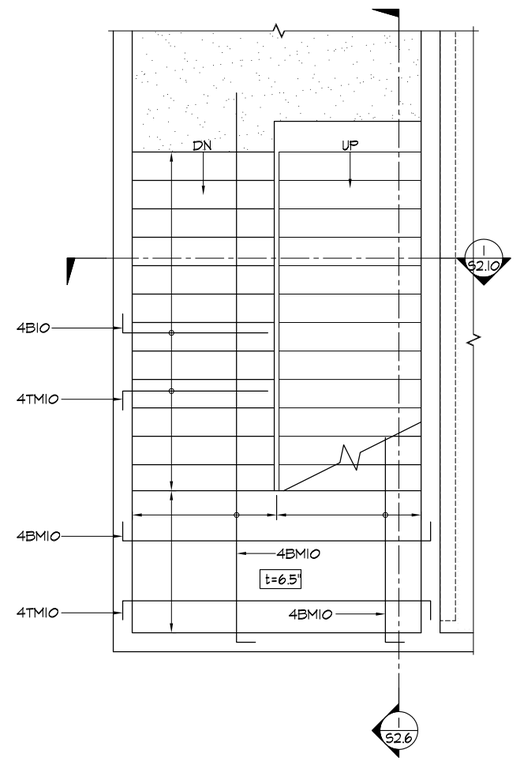

2 / S3.3 LANDING TO 2ND LEVEL FRAMING PLAN
SCALE: 3/8"= 1'-0"

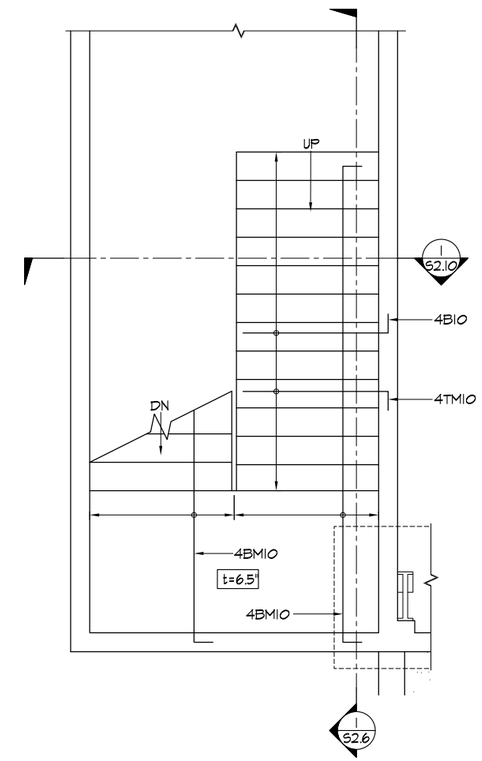

1 / S3.3 1ST LEVEL FRAMING PLAN
SCALE: 3/8"= 1'-0"

IF SHEET IS LESS THAN 24" X 36"
REDUCED PRINT – USE GRAPHIC SCALES

REVISIONS

No.	Description	Date

TRMA
Taniguchi Ruth Makio Architects
100 Cliff Business Center, P.O. Box EA, Agana, GU 96910
Tel.: (671) 475-8772 • Fax.: (671) 472-3381

Architecture
Planning
Interior Design

dueñas camacho & associates inc
■ ENGINEERING (CIVIL/STRUCTURAL)
■ CONSTRUCTION MANAGEMENT ■ PLANNING
■ ENVIRONMENTAL SERVICES ■ SURVEYING
■ DEVELOPMENT CONSULTATION
■ GEOGRAPHIC INFORMATION SYSTEMS
P.O. Box 8950 Tamuning, Guam 96931

BID DOCUMENTS

THOMAS P. CAMACHO
CERTIFICATE
NO. 752
STRUCTURAL
EXP. 04-30-15
GUAM
PROFESSIONAL ENGINEER

I HEREBY CERTIFY THAT THIS PLAN WAS PREPARED BY ME OR UNDER MY DIRECT SUPERVISION

DATE: _____

Project:
GCC
BLDG 200 RENOVATION

Title:
STAIR #2 FRAMING PLAN

Designed:	TPC
Drawn:	PCP
Checked:	TPC
Supv:	TPC
Scale:	AS SHOWN
Date:	
Project No. GG11-07	AutoCAD File GG1107-S3.3

Drawing No.
S3.3

Sheet No. _____ of _____

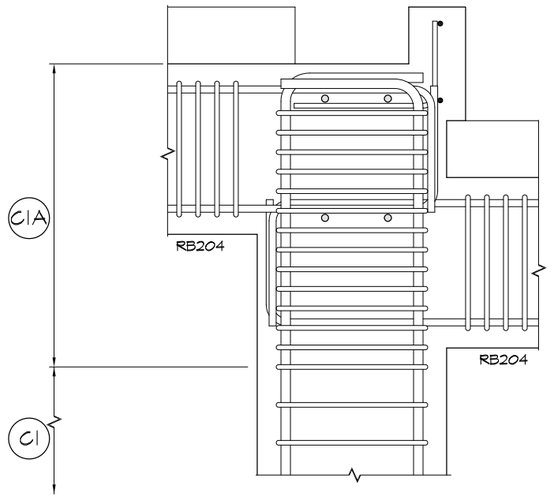

4 S4.1 "C1A" SECTION
SCALE: 1 1/2"= 1'-0"

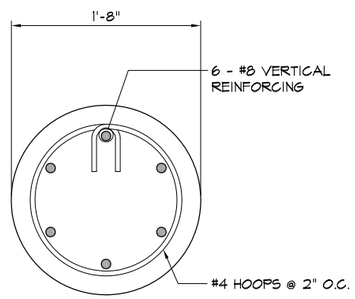

C1A

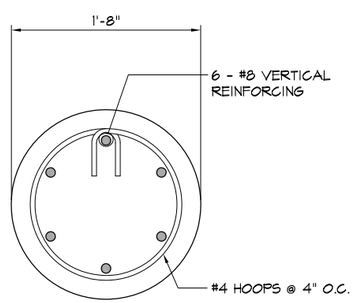

C1

3 S4.1 COLUMN DETAIIL
SCALE: 1 1/2"= 1'-0"

COLUMN FOOTING SCHEDULE

FOOTING MARK	SIZE (L x W)	DEPTH (Inches)	REINFORCEMENT			REMARKS
			"X" BARS	"Y" BARS	Z BARS	
CF2.5	2'-6" x 2'-6"	12"	#5 @ 12" O.C.	#5 @ 12" O.C.	#5 @ 12" O.C.	

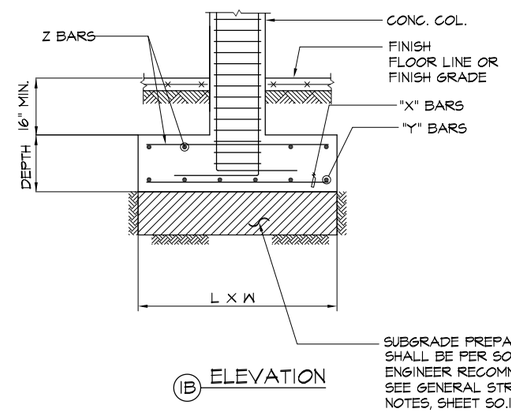

1B ELEVATION

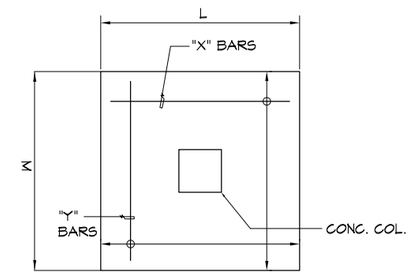

1A PLAN

1 S4.1 COLUMN FOOTING DETAIL
NOT TO SCALE

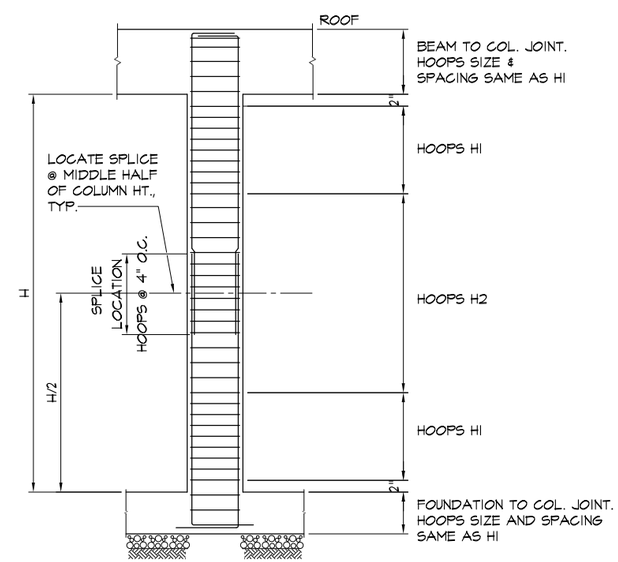

2 S4.1 TYP. COLUMN and BEAM ELEVATION
NOT TO SCALE

IF SHEET IS LESS THAN 24" X 36" REDUCED PRINT – USE GRAPHIC SCALES

REVISIONS		
No.	Description	Date

TRMA
Taniguchi Ruth Makio Architects
100 Cliff Business Center, P.O. Box EA, Agana, GU 96910
Tel.: (671) 475-8772 • Fax.: (671) 472-3381
Architecture
Planning
Interior Design

dueñas camacho & associates inc
■ ENGINEERING (CIVIL/STRUCTURAL)
■ CONSTRUCTION MANAGEMENT ■ PLANNING
■ ENVIRONMENTAL SERVICES ■ SURVEYING
■ DEVELOPMENT CONSULTATION
■ GEOGRAPHIC INFORMATION SYSTEMS
P.O. Box 8950 Tamuning, Guam 96931

BID DOCUMENTS

THOMAS P. CAMACHO CERTIFICATE NO. 752 STRUCTURAL EXP. 04-30-13 GUAM PROFESSIONAL ENGINEER

I HEREBY CERTIFY THAT THIS PLAN WAS PREPARED BY ME OR UNDER MY DIRECT SUPERVISION

DATE: _____

Project:
GCC
BLDG 200 RENOVATION

Title:
COLUMN FOOTING SCHEDULE TYP. FOOTING & ELEV. DETAIL AND TYP. COLUMN DETAIL

Designed:	TPC
Drawn:	PCP
Checked:	TPC
Supv:	TPC
Scale:	AS SHOWN
Date:	
Project No. GG11-07	AutoCAD File GG1107-S4.1

Drawing No.
S4.1

Sheet No. _____ of _____

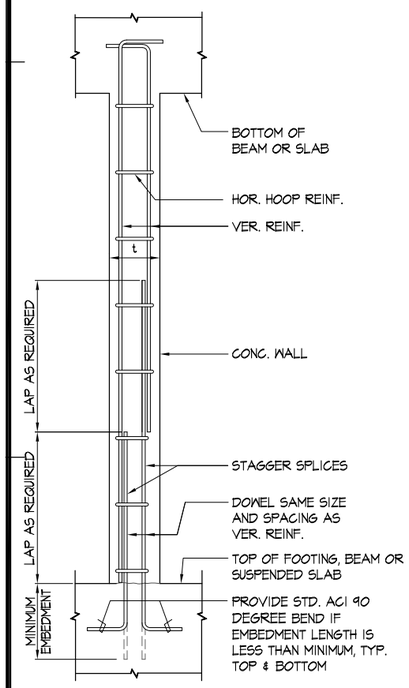

TYPE DH

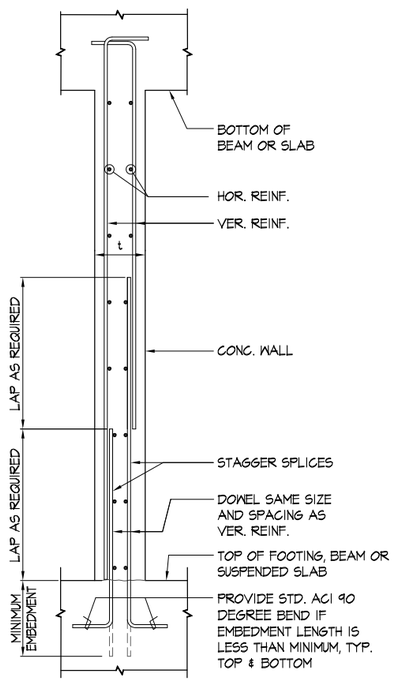

TYPE D

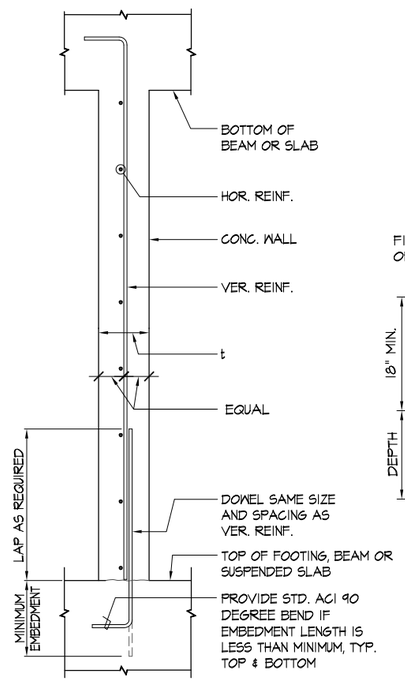

TYPE S

WALL SCHEDULE

WALL MARK	THICKNESS t	TYPE	REINFORCEMENT		REMARKS
			VERT. BARS	HOR. BARS	
W8	8"	S	#5 @ 12" O.C.	#4 @ 8" O.C.	
W8A	8"	S	#5 @ 8" O.C.	#4 @ 8" O.C.	
W8B	8"	S	#5 @ 6" O.C.	#4 @ 8" O.C.	
W8C	8"	S	#4 @ 10" O.C.	#4 @ 10" O.C.	
W10	10"	S	#5 @ 12" O.C.	#4 @ 8" O.C.	
W10A	10"	S	#5 @ 8" O.C.	#4 @ 8" O.C.	
W12	12"	D	#5 @ 12" O.C.	#4 @ 8" O.C.	
W12A	12"	DH	#5 @ 12" O.C.	#4 HOOPS @ 8" O.C.	

2 / S5.1 TYPICAL WALL DETAILS

NOT TO SCALE

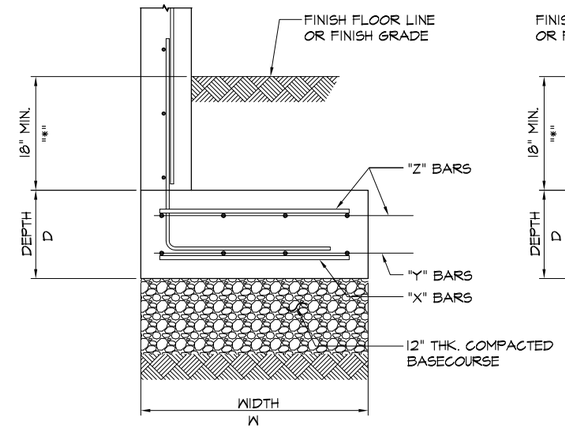

TYPE C

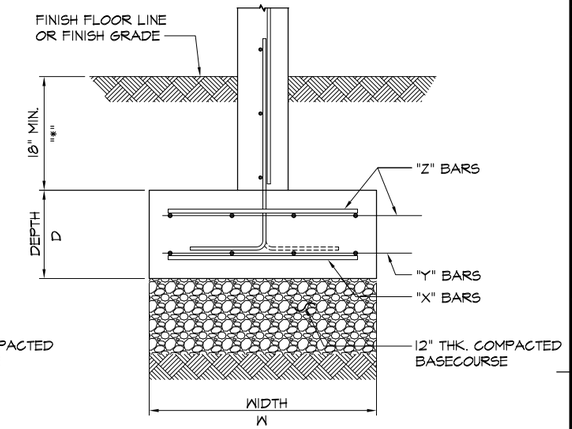

TYPE B

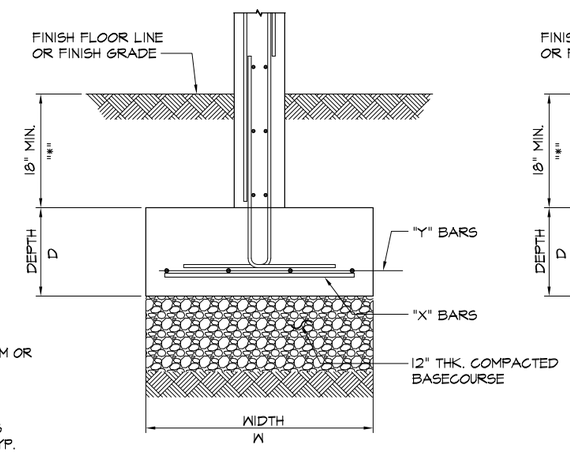

A-DOUBLE

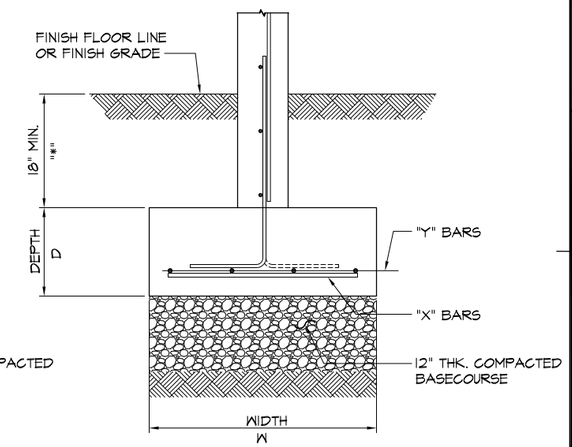

A-SINGLE

TYPE A

WALL FOOTING SCHEDULE

FOOTING MARK	WIDTH W	DEPTH D	FOOTING TYPE	REINFORCEMENT			REMARKS
				"Y" BARS	"X" BARS	"Z" BARS	
WF2	2'-0"	12"	A	#4 @ 8" O.C.	#5 @ 12" O.C.	-	
WF3	3'-0"	12"	A	#4 @ 8" O.C.	#5 @ 12" O.C.	-	
WF3.25	3'-3"	12"	A	#4 @ 8" O.C.	#5 @ 12" O.C.	-	
WF4.17	4'-2"	12"	B	#4 @ 8" O.C.	#5 @ 6" O.C.	#5 @ 6" O.C.	
WF4.17A	4'-2"	12"	C	#4 @ 8" O.C.	#5 @ 6" O.C.	#5 @ 6" O.C.	

1 / S5.1 WALL FOOTING DETAILS

NOT TO SCALE

IF SHEET IS LESS THAN 24" X 36"
REDUCED PRINT – USE GRAPHIC SCALES

REVISIONS

No.	Description	Date

TRMA
Taniguchi Ruth Makio Architects
100 Cliff Business Center, P.O. Box EA, Agana, GU 96910
Tel.: (671) 475-8772 • Fax.: (671) 472-3381
Architecture
Planning
Interior Design

dueñas camacho & associates inc
■ ENGINEERING (CIVIL/STRUCTURAL)
■ CONSTRUCTION MANAGEMENT ■ PLANNING
■ ENVIRONMENTAL SERVICES ■ SURVEYING
■ DEVELOPMENT CONSULTATION
■ GEOGRAPHIC INFORMATION SYSTEMS
P.O. Box 8950 Tamuning, Guam 96931

BID DOCUMENTS

THOMAS P. CAMACHO
CERTIFICATE
NO. 752
STRUCTURAL
EXP. 04-30-15
GUAM
PROFESSIONAL ENGINEER

I HEREBY CERTIFY THAT THIS PLAN WAS PREPARED BY ME OR UNDER MY DIRECT SUPERVISION

DATE: _____

Project:
GCC
BLDG 200 RENOVATION

Title:
WALL SCHEDULE
WALL FOOTING SCHEDULE
AND TYP. DETAIL

Designed:	TPC
Drawn:	PCP
Checked:	TPC
Supv:	TPC
Scale:	AS SHOWN
Date:	
Project No.	6611-07
AutoCAD File	661107-S5.1

Drawing No.
S5.1

Sheet No. _____ of _____

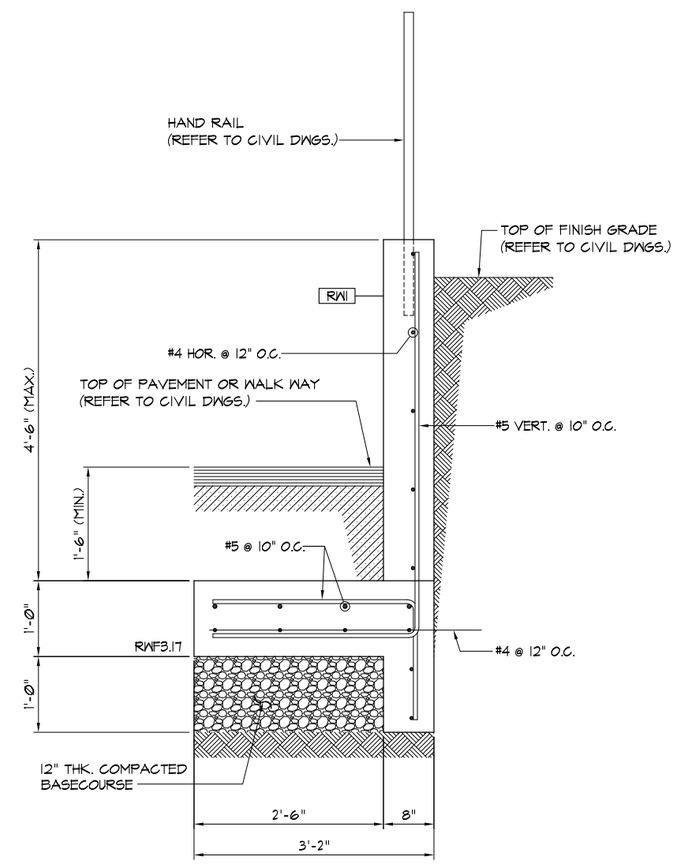

1 / S5.2 RETAINING WALL DETAIL

SCALE: 1"=1'-0"

IF SHEET IS LESS THAN 24" X 36"
REDUCED PRINT – USE GRAPHIC SCALES

REVISIONS		
No.	Description	Date

TRMA
Taniguchi Ruth Makio Architects
100 Cliff Business Center, P.O. Box EA, Agana, GU 96910
Tel.: (671) 475-8772 • Fax.: (671) 472-3381

Architecture
Planning
Interior Design

dueñas camacho & associates inc
■ ENGINEERING (CIVIL/STRUCTURAL)
■ CONSTRUCTION MANAGEMENT ■ PLANNING
■ ENVIRONMENTAL SERVICES ■ SURVEYING
■ DEVELOPMENT CONSULTATION
■ GEOGRAPHIC INFORMATION SYSTEMS
P.O. Box 8950 Tamuning, Guam 96931

BID DOCUMENTS

THOMAS P. CAMACHO
CERTIFICATE
NO. 752
STRUCTURAL
EXP. 04-30-13
GUAM
PROFESSIONAL ENGINEER

I HEREBY CERTIFY THAT THIS PLAN WAS PREPARED BY ME OR UNDER MY DIRECT SUPERVISION

DATE: _____

Project:

GCC

BLDG 200 RENOVATION

Title:

RETAILING WALL DETAILS

Designed:	TPC
Drawn:	PCP
Checked:	TPC
Supv:	TPC
Scale:	AS SHOWN
Date:	
Project No. GG11-07	AutoCAD File GG1107-S5.2

Drawing No.

S5.2

Sheet No. _____ of _____

BEAM SCHEDULE

BEAM MARK	SIZE BXD	SECTION	ELEVATION	TOP BARS			BOTTOM BARS		HOOPS		REMARKS
				CONT.	LEFT END	RIGHT END	CONT.	EXTRA	HE	HM	
GROUND FLOOR BEAMS											
FB101	20X30	A	S6.2	3-#5	-	-	3-#5	-	-	-	MATCH HOOP SPACING WITH WALL VERTICAL REINFORCING
FB102	20X22	B	S6.2	3-#5	-	-	3-#5	-	-	-	MATCH HOOP SPACING WITH WALL VERTICAL REINFORCING
SECOND FLOOR BEAMS											
FB201	8X20	C	S6.2	2-#5	-	-	2-#5	-	14-#3 @ 2" O.C.	#3 @ 4"	
FB202	20X30	A	S6.2	3-#5	-	-	3-#5	-	-	-	MATCH HOOP SPACING WITH WALL VERTICAL REINFORCING
FB203	20X12	G	S6.2	3-#5	-	-	3-#5	-	-	-	MATCH HOOP SPACING WITH WALL VERTICAL REINFORCING
RB201	12X58	D	S6.2	2-#6	-	-	2-#6	-	14-#4 @ 2" O.C.	#4 @ 4"	
RB202	12X52	D	S6.2	2-#6	-	-	4-#6	-	14-#4 @ 2" O.C.	#4 @ 4"	
RB203	24X18	E	S6.2	2-#6	-	-	4-#6	-	14-#4 @ 2" O.C.	#4 @ 4"	
RB204	24X18	F	S6.2	2-#6	-	-	2-#6	-	14-#4 @ 2" O.C.	#4 @ 4"	
RB205	-	I	S6.2	-	-	-	-	-	14-#4 @ 2" O.C.	#4 @ 4"	SEE SECTION "I" FOR DIMENSION & REINFORCING
ROOF BEAMS											
RB01	8X20	C	S6.2	2-#5	-	-	2-#5	-	14-#3 @ 2" O.C.	#3 @ 2"	
RB02	8X12	H	S6.2	2-#5	-	-	2-#5	-	14-#3 @ 2" O.C.	#3 @ 2"	
RB03	10X12	H	S6.2	2-#5	-	-	2-#5	-	14-#3 @ 2" O.C.	#3 @ 2"	

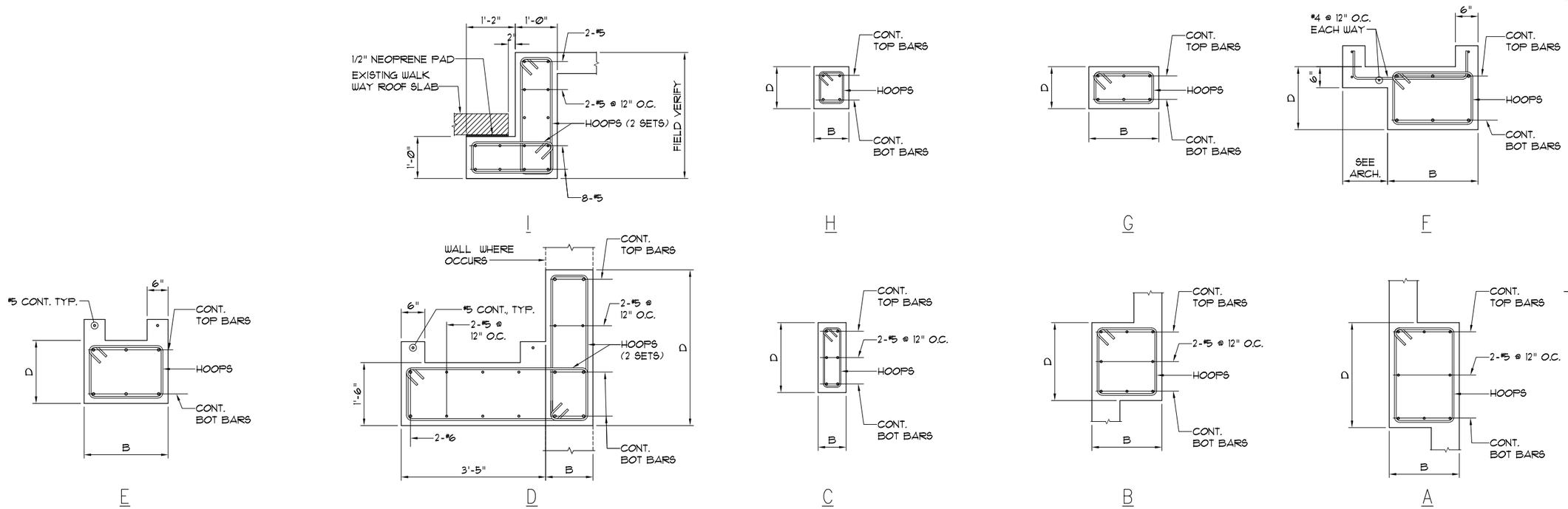

1 / S6.1 TYP. BEAM SECTION

NOT TO SCALE

IF SHEET IS LESS THAN 24" X 36" REDUCED PRINT – USE GRAPHIC SCALES

REVISIONS

No.	Description	Date

TRMA
Taniguchi Ruth Makio Architects
100 Cliff Business Center, P.O. Box EA, Agana, GU 96910
Tel.: (671) 475-8772 • Fax.: (671) 472-3381
Architecture
Planning
Interior Design

dueñas camacho & associates inc
■ ENGINEERING (CIVIL/STRUCTURAL)
■ CONSTRUCTION MANAGEMENT ■ PLANNING
■ ENVIRONMENTAL SERVICES ■ SURVEYING
■ DEVELOPMENT CONSULTATION
■ GEOGRAPHIC INFORMATION SYSTEMS
P.O. Box 8950 Tamuning, Guam 96931

BID DOCUMENTS

THOMAS P. CAMACHO CERTIFICATE NO. 752 STRUCTURAL EXP. 04-30-15 GUAM PROFESSIONAL ENGINEER

I HEREBY CERTIFY THAT THIS PLAN WAS PREPARED BY ME OR UNDER MY DIRECT SUPERVISION

DATE: _____

Project:

GCC

BLDG 200 RENOVATION

Title:

BEAM SCHEDULE AND TYPICAL DETAILS

Designed:	TPC
Drawn:	PCP
Checked:	TPC
Supv:	TPC
Scale:	AS SHOWN
Date:	
Project No. GG11-07	AutoCAD File GG1107-S6.1

Drawing No.

S6.1

Sheet No. _____ of _____

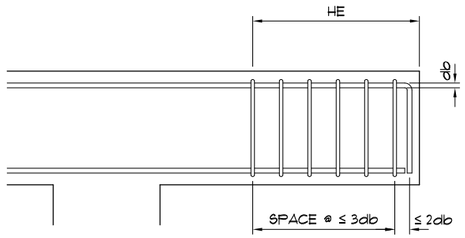

4 / S6.2 TYP. STANDARD HOOPS AT DISCONTINUOUS ENDS

NOT TO SCALE

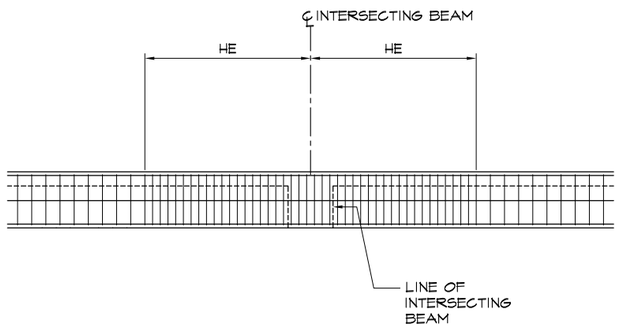

3 / S6.2 TYPICAL BEAM HOOPS @ INTERSECTION

NOT TO SCALE

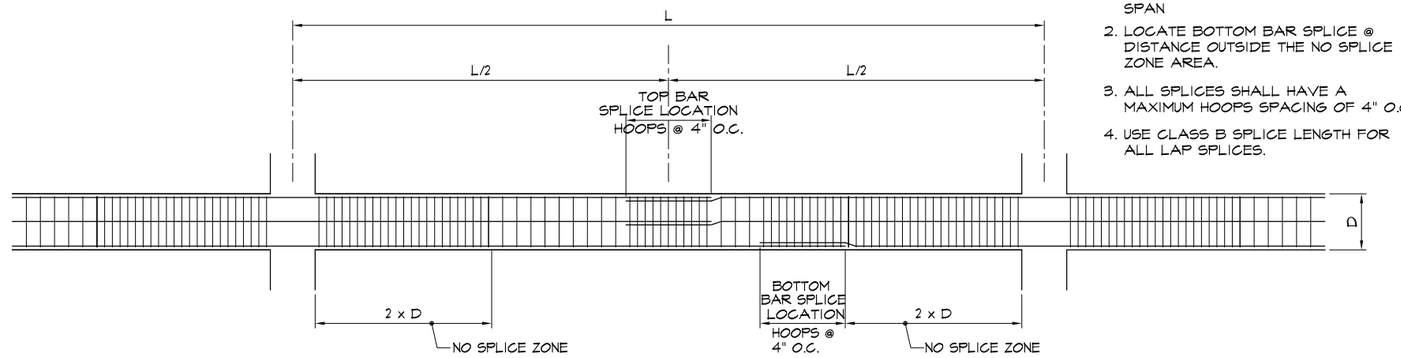

NOTE:

1. LOCATE TOP BAR SPLICE @ MID SPAN
2. LOCATE BOTTOM BAR SPLICE @ DISTANCE OUTSIDE THE NO SPLICE ZONE AREA.
3. ALL SPLICES SHALL HAVE A MAXIMUM HOOPS SPACING OF 4" O.C.
4. USE CLASS B SPLICE LENGTH FOR ALL LAP SPLICES.

2 / S6.2 TYPICAL BEAM SPLICE LOCATION

NOT TO SCALE

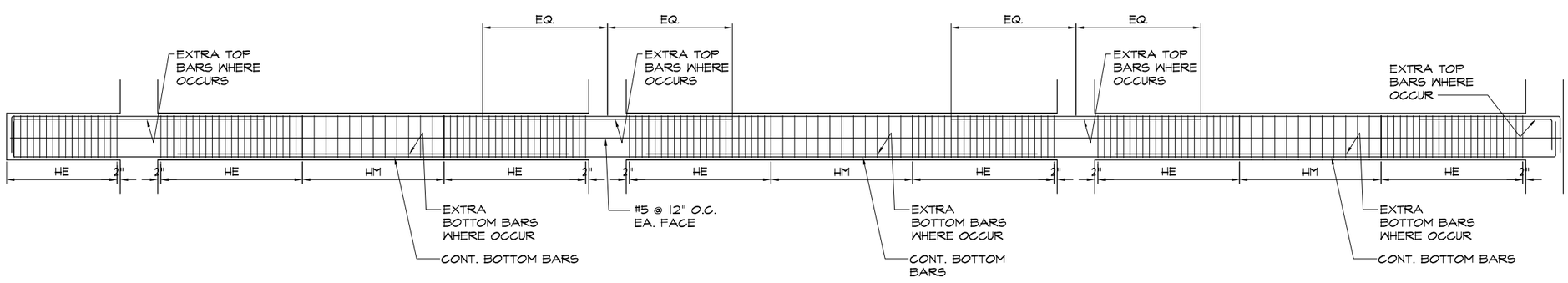

EXTERIOR SPAN WITH OVERHANG

INTERIOR SPAN

EXTERIOR SPAN

1 / S6.2 TYPICAL BEAM ELEVATION

NOT TO SCALE

IF SHEET IS LESS THAN 24" X 36" REDUCED PRINT – USE GRAPHIC SCALES

REVISIONS

No.	Description	Date

TRMA
Taniguchi Ruth Makio Architects
100 Cliff Business Center, P.O. Box EA, Agana, GU 96910
Tel.: (671) 475-8772 • Fax.: (671) 472-3381
Architecture
Planning
Interior Design

dueñas camacho & associates inc
■ ENGINEERING (CIVIL/STRUCTURAL)
■ CONSTRUCTION MANAGEMENT ■ PLANNING
■ ENVIRONMENTAL SERVICES ■ SURVEYING
■ DEVELOPMENT CONSULTATION
■ GEOGRAPHIC INFORMATION SYSTEMS
P.O. Box 8900 Tamuning, Guam 96931

BID DOCUMENTS

THOMAS P. CAMACHO CERTIFICATE NO. 752 STRUCTURAL EXP. 04-30-13 GUAM PROFESSIONAL ENGINEER

I HEREBY CERTIFY THAT THIS PLAN WAS PREPARED BY ME OR UNDER MY DIRECT SUPERVISION

DATE: _____

Project:

GCC

BLDG 200 RENOVATION

Title:

TYPICAL BEAM ELEVATIONS

Designed:	TPC
Drawn:	PCP
Checked:	TPC
Supv:	TPC
Scale:	AS SHOWN
Date:	
Project No. GG11-07	AutoCAD File GG1107-S6.2

Drawing No.

S6.2

Sheet No. _____ of _____

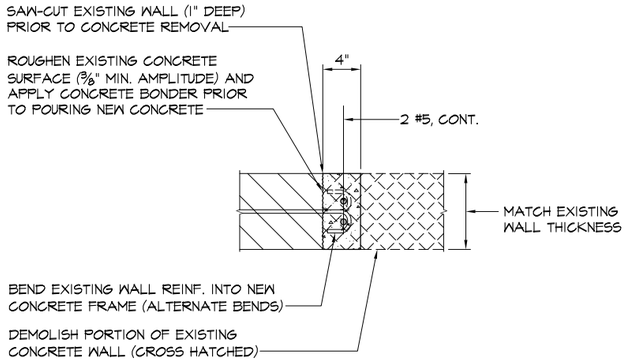

3C DETAIL

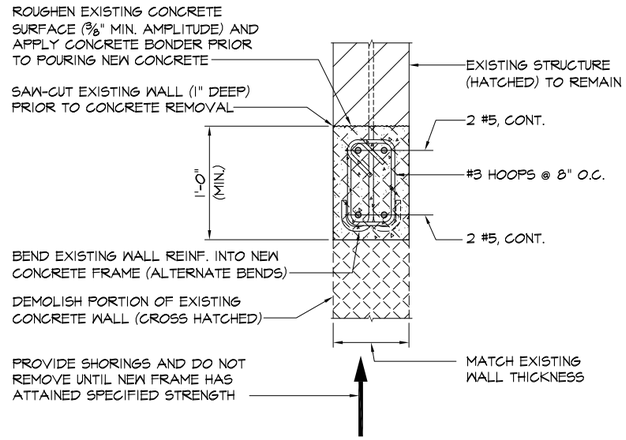

3B DETAIL

3 / S7.1 WALL OPENING DETAIL
NOT TO SCALE

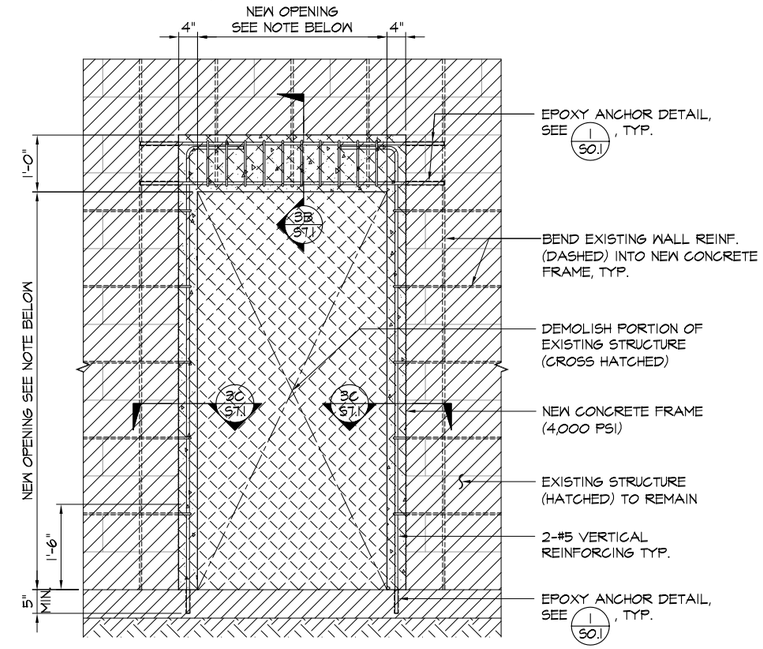

NOTE:
REFER TO THE ARCHITECTURAL DRAWINGS FOR EXACT SIZE AND LOCATION OF NEW OPENING.

3A ELEVATION

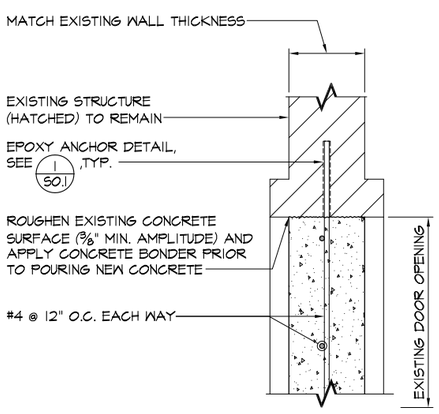

2B DETAIL

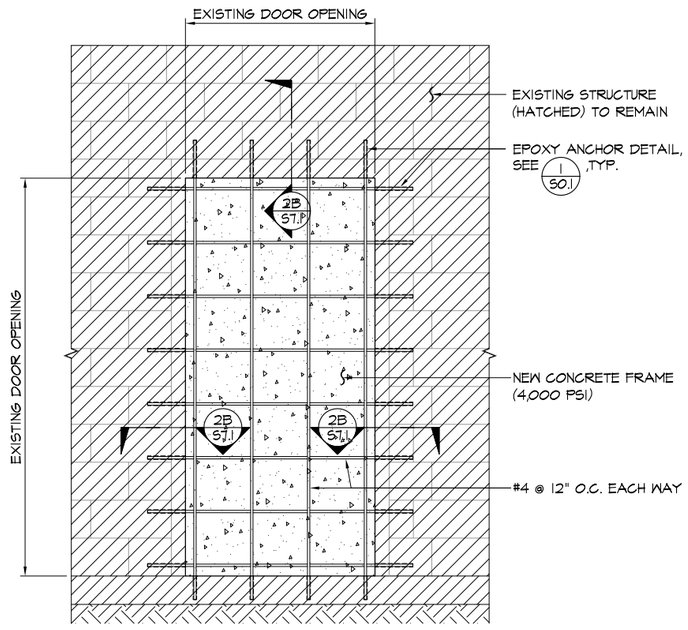

2A ELEVATION

2 / S7.1 WALL INFILL DETAIL
NOT TO SCALE

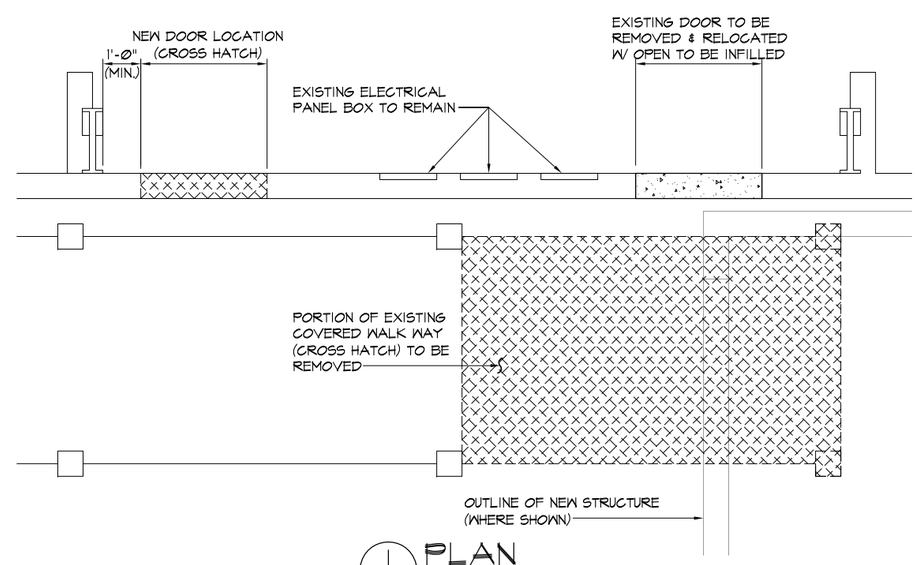

1 / S7.1 PLAN
NOT TO SCALE

IF SHEET IS LESS THAN 24" X 36" REDUCED PRINT – USE GRAPHIC SCALES

REVISIONS

No.	Description	Date

TRMA
Taniguchi Ruth Makio Architects
100 Cliff Business Center, P.O. Box EA, Agana, GU 96910
Tel.: (671) 475-8772 • Fax.: (671) 472-3381
Architecture
Planning
Interior Design

dueñas camacho & associates inc
■ ENGINEERING (CIVIL/STRUCTURAL)
■ CONSTRUCTION MANAGEMENT ■ PLANNING
■ ENVIRONMENTAL SERVICES ■ SURVEYING
■ DEVELOPMENT CONSULTATION
■ GEOGRAPHIC INFORMATION SYSTEMS
P.O. Box 8900 Tamuning, Guam 96931

BID DOCUMENTS

THOMAS P. CAMACHO CERTIFICATE NO. 752 STRUCTURAL EXP. 04-30-13 GUAM PROFESSIONAL ENGINEER

I HEREBY CERTIFY THAT THIS PLAN WAS PREPARED BY ME OR UNDER MY DIRECT SUPERVISION

DATE: _____

Project:
GCC
BLDG 200 RENOVATION

Title:
EXISTING DOOR RELOCATION PLAN AND DETAILS

Designed:	TPC
Drawn:	PCP
Checked:	TPC
Supv:	TPC
Scale:	AS SHOWN
Date:	
Project No. GG11-07	AutoCAD File GG1107-S7.1

Drawing No.
S7.1

Sheet No. _____ of _____

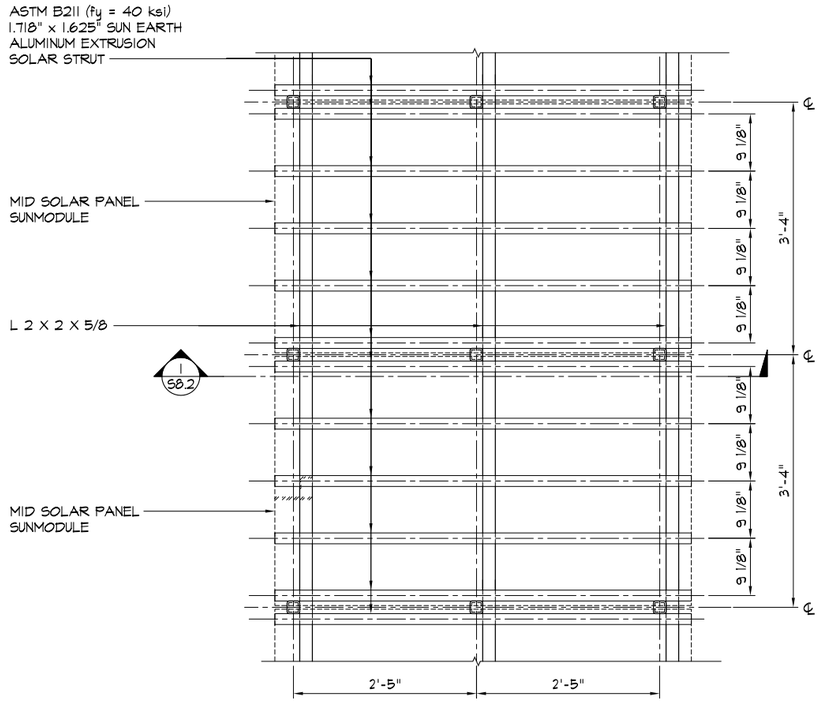

4 / S8.1 PARTIAL FRAMING PLAN @ MID

SCALE: 1"=1'-0"

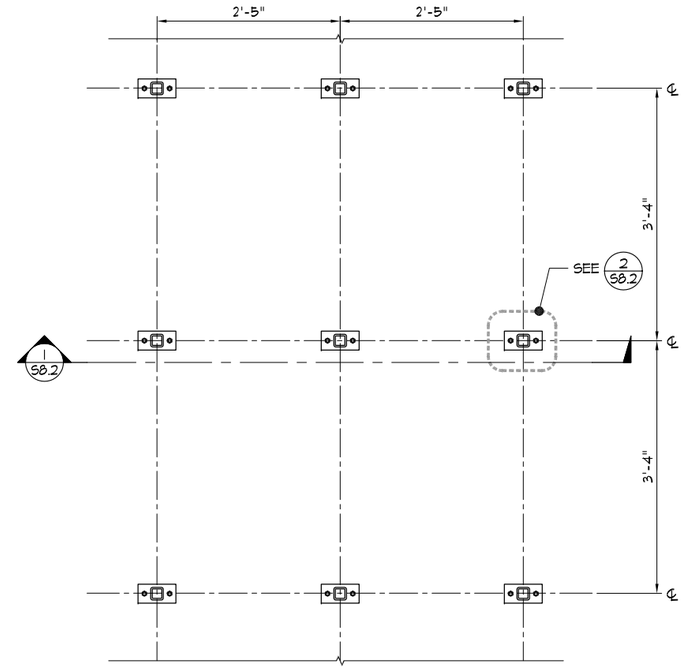

3 / S8.1 PARTIAL PLAN @ MID

SCALE: 1"=1'-0"

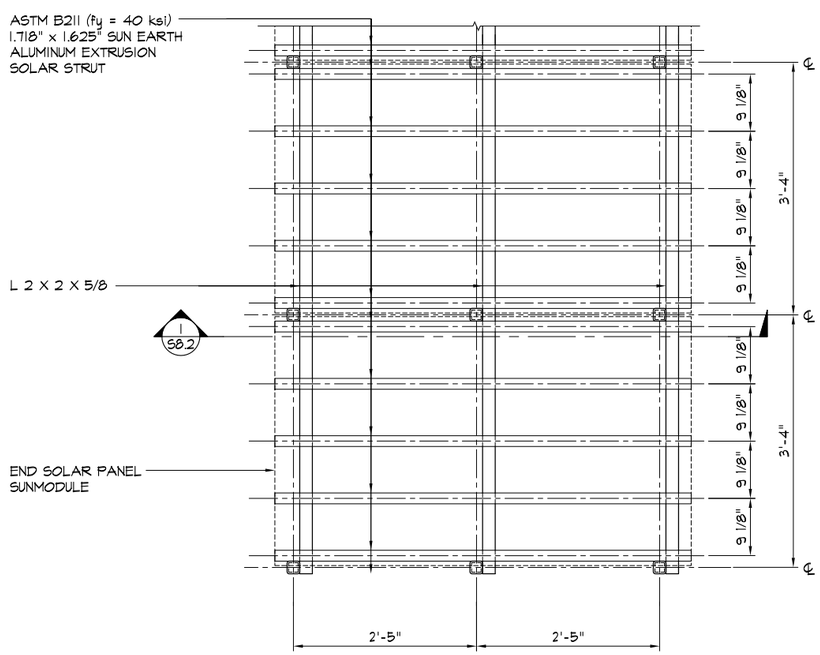

2 / S8.1 PARTIAL FRAMING PLAN @ END

SCALE: 1"=1'-0"

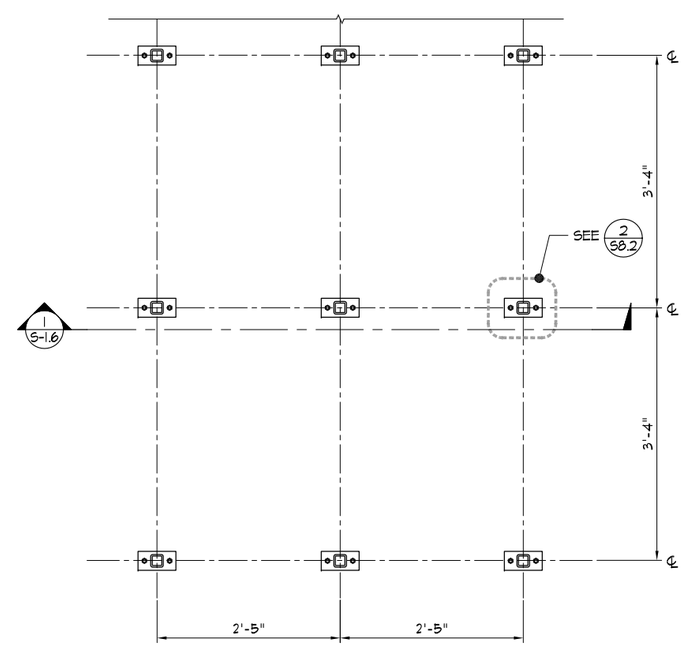

1 / S8.1 PARTIAL PLAN @ END

SCALE: 1"=1'-0"

IF SHEET IS LESS THAN 24" X 36"
REDUCED PRINT – USE GRAPHIC SCALES

REVISIONS

No.	Description	Date
R1	"ADDED PV SYSTEM & SIGNAGE LIGHT"	

TRMA
Taniguchi Ruth Makio Architects
100 Cliff Business Center, P.O. Box EA, Agana, GU 96910
Tel.: (671) 475-8772 • Fax.: (671) 472-3381
Architecture
Planning
Interior Design

dueñas camacho & associates inc
■ ENGINEERING (CIVIL/STRUCTURAL)
■ CONSTRUCTION MANAGEMENT ■ PLANNING
■ ENVIRONMENTAL SERVICES ■ SURVEYING
■ DEVELOPMENT CONSULTATION
■ GEOGRAPHIC INFORMATION SYSTEMS
P.O. Box 8950 Tamuning, Guam 96931

BID DOCUMENTS

THOMAS P. CAMACHO CERTIFICATE NO. 752 STRUCTURAL EXP. 04-30-13 GUAM PROFESSIONAL ENGINEER

I HEREBY CERTIFY THAT THIS PLAN WAS PREPARED BY ME OR UNDER MY DIRECT SUPERVISION

DATE: _____

Project:
GCC
BLDG 200 RENOVATION

Title:
PHOTOVOLTAIC SYSTEM PARTIAL PLAN AND FRAMING @ ENDS & MID.

Designed:	TPC
Drawn:	PCP
Checked:	TPC
Supv:	TPC
Scale:	AS SHOWN
Date:	
Project No. GG11-07	AutoCAD File GG1107-S8.1

Drawing No.
S8.1

Sheet No. _____ of _____

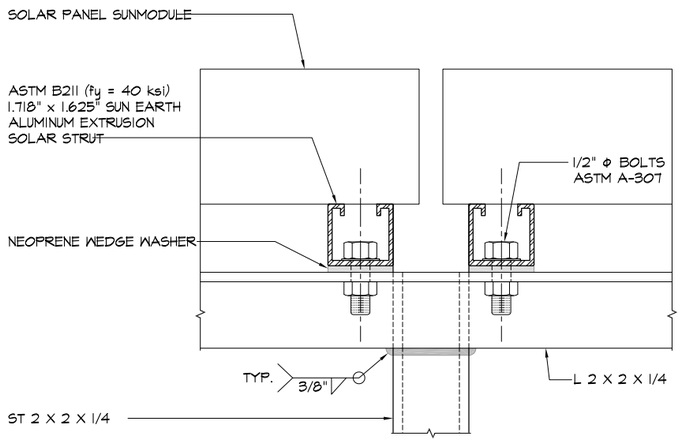

5 / S8.2 DETAIL
SCALE: 6"=1'-0"

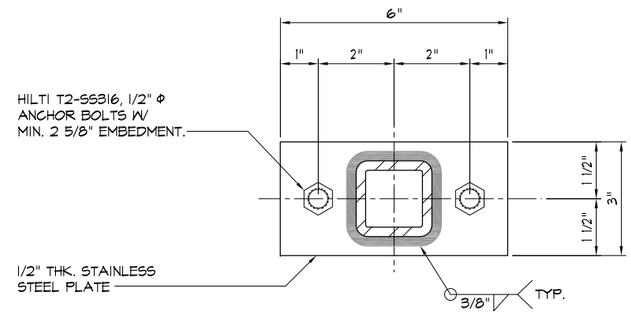

2 / S8.2 DETAIL
SCALE: 3"=1'-0"

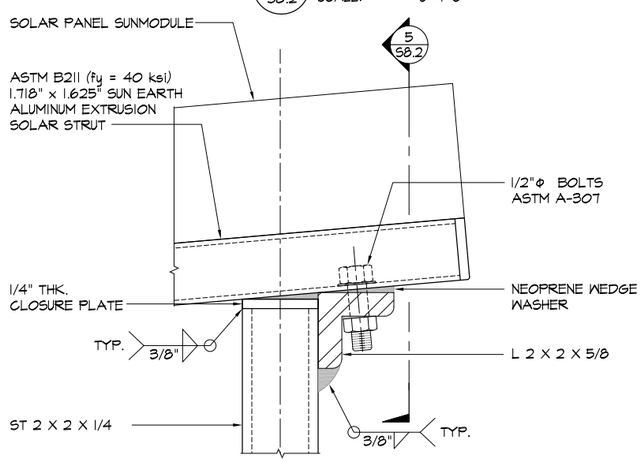

4 / S8.2 DETAIL
SCALE: 6"=1'-0"

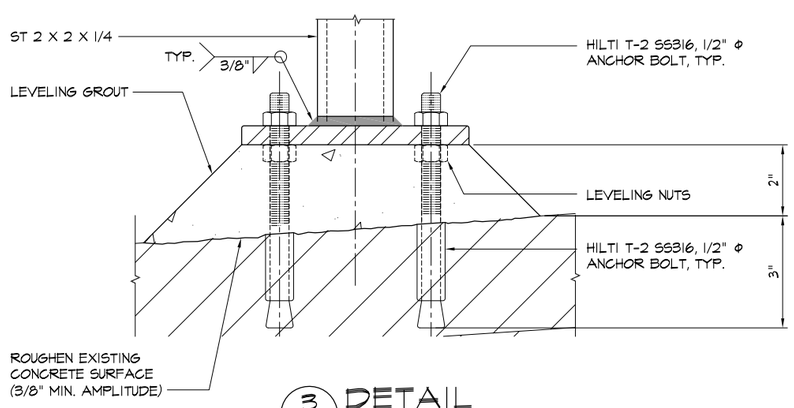

3 / S8.2 DETAIL
SCALE: 6"=1'-0"

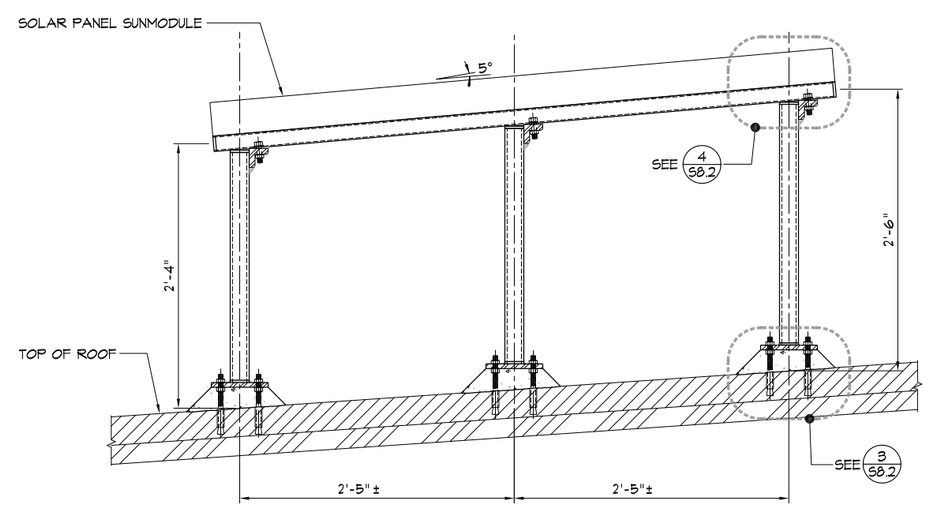

1 / S8.2 ELEVATION/SECTION
SCALE: 1 1/2"=1'-0"

IF SHEET IS LESS THAN 24" X 36"
REDUCED PRINT – USE GRAPHIC SCALES

REVISIONS		
No.	Description	Date
R1	"ADDED PV SYSTEM & SIGNAGE LIGHT"	

TRMA
Taniguchi Ruth Makio Architects
100 Cliff Business Center, P.O. Box EA, Agana, GU 96910
Tel.: (671) 475-8772 • Fax.: (671) 472-3381
Architecture
Planning
Interior Design

dueñas camacho & associates inc
■ ENGINEERING (CIVIL/STRUCTURAL)
■ CONSTRUCTION MANAGEMENT ■ PLANNING
■ ENVIRONMENTAL SERVICES ■ SURVEYING
■ DEVELOPMENT CONSULTATION
■ GEOGRAPHIC INFORMATION SYSTEMS
P.O. Box 8950 Tamuning, Guam 96931

BID DOCUMENTS

THOMAS P. CAMACHO
CERTIFICATE
NO. 752
STRUCTURAL
EXP. 04-30-13
GUAM
PROFESSIONAL ENGINEER

I HEREBY CERTIFY THAT THIS PLAN WAS PREPARED BY ME OR UNDER MY DIRECT SUPERVISION

DATE: _____

Project:
GCC
BLDG 200 RENOVATION

Title:
PHOTOVOLTAIC SYSTEM TYPICAL SECTION & DETAILS

Designed:	TPC
Drawn:	PCP
Checked:	TPC
Supv:	TPC
Scale:	AS SHOWN
Date:	
Project No. 6611-07	AutoCAD File 661107-S8.2

Drawing No.
S8.2

Sheet No. _____ of _____